Creating a Green World

AQua

FILTRATION & FERTIGATION | 2017

AUTOMAT

Index

Product Name		Page No.
Automat Screen Filters		4
Automat Disc Filters		5
Y Type Screen Filters	Sizes	
AQ-121Y & AQ-122Y	¾″ & 1″	6-7
AQ-123YF & AQ-123Y	1¼″ & 1½″	8-9
AQ-124YS & AQ-124Y	2″	10-11
Y Type Disc Filters		
AQ-131Y & AQ-132Y	¾″ & 1″	12-13
AQ-133YM & AQ-134YS	1½″ & 2″	14-15
Mini T Type Filters		
AQ-123T & AQ-124TM	1½″ & 2″	16-17
AQ-133T & AQ-134TM	1½″ & 2″	18-19
T Type Screen Filters		
AQ-124T(HC) & AQ-124T	2″ (Short Body)	20-21
AQ-124TL(HC) & AQ-124TL	2″ (Long Body)	22-23
AQ-125T(HC) & AQ-125T	2½″ (Short Body)	24-25
AQ-125TL(HC) & AQ-125TL	2½″ (Long Body)	26-27
AQ-126T(HC) & AQ-126T	3″ (Short Body)	28-29
AQ-126TL(HC) & AQ-126TL	3″ (Long Body)	30-31
T Type Disc Filters		
AQ-134TS(HC) & AQ-134TS	2″ (Short Body)	32-33
AQ-134T(HC) & AQ-134T	2″ (Long Body)	34-35
AQ-135T(HC) & AQ-135T	2½″ (Short Body)	36-37
AQ-135TL(HC) & AQ-135TL	2½″ (Long Body)	38-39
AQ-136TS(HC) & AQ-136TS	3″ (Short Body)	40-41
AQ-136T(HC) & AQ-136T	3″ (Long Body)	42-43
Double Body Screen Filters		
AQ-126D	3″	44-45
AQ-128DS & AQ-128D	4″	46-47
Double Body Disc Filters		
AQ-136D	3″	48-49
AQ-138DS & AQ-138D	4″	50-51
Hydrocyclone Filters		
AQ-144 & AQ-145	2″ & 2½″	52-53
AQ-146	3″	54-55
Venturi Injector		
AQ-112RS & AQ-113RS	¾″ & 1″	56-57
AQ-114RS	1½″	58-59
AQ-115RS	2″	60-61
Fertilizer Tank		
AQ-117		62-63

Introduction

The evolution of micro Irrigation industry is a continuous journey on the path of low energy and precision application. This has been happening by reducing the aperture of water outlet.

Given the quality of water, the success of this stupendous task would not have been possible without good quality primary and secondary filtration systems.

The filtration equipment developed by us keep in mind the extreme hostile environment that they are subjected to.

The popularity of metal filtration equipment though on the decline is still high and the biggest challenge for us is creating an acceptance for longer lasting plastic filtration equipment in certain markets.

TEAM AUTOMAT

ABBREVIATIONS USED IN THIS CATALOG

- PP – Polypropylene
- PA – Polyamide (Nylon)
- POM – Polyoxymethylene (Polyacetal)
- PVC – Polyvinyl Chloride
- EPDM – Ethylene Propylene Diene Monomer
- NBR – Nitrile Butadiene Rubber
- TPU – Thermoplastic Polyurethane
- SS – Stainless Steel

FILTERING ELEMENT

Inside to Outside Flow (Screen)

Outside to Inside Flow (Screen)

Outside to Inside Flow (Disc)

AQua

AUTOMAT SCREEN FILTERS

Model	121Y	122Y	123YM	124YS	124Y	123T	124TM	124T	124TL	125T	125T-L	126T	126T-L	126D	128DS	128D
Max. Working Pressure	6 kg/cm²	6 kg/cm²	6 kg/cm²	6 kg/cm²	8 kg/cm²	6 kg/cm²	6 kg/cm²	8 kg/cm²	8 kg/cm²	8 kg/cm²	8 kg/cm²	8 kg/cm²	8 kg/cm²	8 kg/cm²	8 kg/cm²	8 kg/cm²
Recommen-ded flow	83 lit/m	116.7 lit/m	250 lit/m	333 lit/m	417 lit/m	250 lit/m	333 lit/m	417 lit/m	500 lit/m	500 lit/m	667 lit/m	667 lit/m	833 lit/m	833 lit/m	1167 lit/m	1500 lit/m
	(5 m³/h)	(7 m³/h)	(15 m³/h)	(20 m³/h)	(25 m³/h)	(15 m³/h)	(20 m³/h)	(25 m³/h)	(30 m³/h)	(30 m³/h)	(40 m³/h)	(40 m³/h)	(50 m³/h)	(50 m³/h)	(70 m³/h)	(90 m³/h)
Range of Flow Rate	4 – 6 m³/h	5 – 8 m³/h	12 – 16 m³/h	18 – 22 m³/h	18 – 27 m³/h	12 – 16 m³/h	18 – 22 m³/h	20 – 27 m³/h	25 – 32 m³/h	27 – 35 m³/h	35 – 45 m³/h	35 – 45 m³/h	45 – 51 m³/h	45 – 60 m³/h	60 – 80 m³/h	80 – 100 m³/h
Screen Cartridge (Standard)	Single (SS 316) Screen 120 mesh		Double (SS 316) Screen 30/120 mesh													
Filtration Surface area	120 cm²	120 cm²	295 cm²	295 cm²	492 cm²	295 cm²	295 cm²	554 cm²	831 cm²	554 cm²	831 cm²	831 cm²	1108 in²	1108 cm²	1662 cm²	2216 cm²
Inlet/ outlet connection	¾" BSP/ NPT male thread	1" BSP/ NPT male thread	1½" BSP/ NPT male thread	2" BSP /NPT male thread	2" BSP /NPT male thread	1½" BSP /NPT male thread	2" BSP /NPT male thread	2" BSP /NPT male thread	2" BSP /NPT male thread	2½" BSP /NPT male thread	2½" BSP /NPT male thread	3" BSP /NPT male thread	3" BSP /NPT male thread	3" BSP /NPT male thread	4" BSP /NPT male thread	4" BSP /NPT male thread
Closing System	Threaded Cover	Threaded Cover	Threaded Cover	Threaded Cover	Threaded Cover	Plastic Union Nut	Plastic Union Nut	Stainless Steel Clamp	Stainless Steel Clamp	Stainless Steel Clamp	Stainless Steel Clamp	Stainless Steel Clamp	Stainless Steel Clamp	Stainless Steel Clamp	Stainless Steel Clamp	Stainless Steel Clamp
Distance Connections	155.5 mm	183 mm	237mm	237mm	303mm	208mm	221mm	340mm	340mm	343mm	343 mm	345mm	345mm	360 mm	360 mm	360 mm
Filter height (Drain Valve + End plug)	252 mm	245 mm	320 mm	325 mm	410 mm	342mm	345mm	617 mm	690 mm	620 mm	700 mm	702 mm	842 mm	970 mm	1128 mm	1378 mm
Filter width	87 mm	87 mm	128 mm	128 mm	171 mm	140mm	140mm	249 mm	249 mm	249 mm	249 mm	249 mm	249 mm	257 mm	257 mm	257mm
Cartridge Diameter (with O-ring)	48 mm	48 mm	70 mm	70 mm	110 mm	70 mm	70 mm	122 mm	121 mm	122 mm	121 mm	121 mm	122 mm	121 mm	121 mm	121 mm
Cartridge Length	151 mm	151 mm	224 mm	224 mm	285 mm	224 mm	224 mm	252 mm	382 mm	252 mm	382 mm	382 mm	502 mm	254 mm X 2	383 mm X 2	504 mm X 2
Drain Valve	½" End Plug	¾" Plug Cap	¾" Plug Cap	¾" Plug Cap	¾" Plug Cap	½" End Plug	½" End Plug	¾"M x ¾"F valve	¾"M x ¾"F valve	¾"M x ¾"F valve	¾"M x ¾"F valve	¾"M x ¾"F valve	¾"M x ¾"F valve	¾"M x ¾"F valve	¾"M x ¾"F valve	¾"M x ¾"F valve

AQua

AUTOMAT DISC FILTERS

Model	131Y	132Y	133YM	134YS	133T	134TM	134TS	134T	135T	135TL	136TS	136T	136D	138DS	138D
Max. Working Pressure	6 kg/cm²	6 kg/cm²	6 kg/cm²	6 kg/cm²	6 kg/cm²	6 kg/cm²	8 kg/cm²	8 kg/cm²	8 kg/cm²	8 kg/cm²	8 kg/cm²	8 kg/cm²	8 kg/cm²	8 kg/cm²	8 kg/cm²
Recommen-ded flow	50 lit/m	100 lit/m	250 lit/m	333 lit/m	250 lit/m	333 lit/m	417 lit/m	500 lit/m	500 lit/m	667 lit/m	667 lit/m	833 lit/m	833 lit/m	1167 lit/m	1500 lit/m
	(3 m3/h)	(6 m³/h)	(15 m³/h)	(20 m³/h)	(15 m³/h)	(20 m³/h)	(25 m³/h)	(30 m³/h)	(30 m³/h)	(40 m³/h)	(40 m³/h)	(50 m3/h)	(50 m³/h)	(70 m³/h)	(90 m³/h)
Range of Flow Rate	3 - 5 m3/h	5 – 8 m³/h	12 – 16 m³/h	18 – 22 m³/h	12 – 16 m³/h	18 – 22 m³/h	18 – 27 m³/h	22 – 35 m³/h	25 – 35 m³/h	35 – 45 m³/h	35 – 45 m³/h	45 – 52 m3/h	45 – 60 m³/h	60 – 80 m³/h	80 – 100 m³/h
Filter Disc (Standard)	120 mesh PP disc (One removable cartridge)												120 mesh PP disc (Two removable cartridge)		
Filtration Surface area	147.5 cm²	147.5 cm²	409 cm²	409 cm²	409 cm²	409 cm²	878 cm2	1193 cm²	878 cm²	1193 cm²	1193 cm²	1690 cm²	1756 cm²	2380 cm²	3380 cm²
Inlet/ outlet connection	¾" BSP /NPT male thread	1" BSP/NPT male thread	1½" BSP/ NPT male thread	2" BSP /NPT male thread	1½" BSP/ NPT male thread	2" BSP /NPT male thread	2" BSP /NPT male thread	2" BSP /NPT male thread	2½" BSP /NPT male thread	2½" BSP /NPT male thread	3" BSP /NPT male thread	3" BSP /NPT male thread	3" BSP /NPT male thread	4" BSP /NPT male thread	4" BSP /NPT male thread
Closing System	Threaded Cap	Threaded Cap	Threaded Cap	Threaded Cap	Plastic Union Nut	Plastic Union Nut	Stainless Steel Clamp	Stainless Steel Clamp	Stainless Steel Clamp	Stainless Steel Clamp	Stainless Steel Clamp	Stainless Steel Clamp	Stainless Steel Clamp	Stainless Steel Clamp	Stainless Steel Clamp
Distance Connections between End	155.5 mm	183 mm	237 mm	237 mm	208 mm	221mm	340 mm	340mm	343mm	343mm	345 mm	345mm	360mm	360mm	360mm
Filter height (Drain Valve + End Cap)	252 mm	245 mm	320 mm	325 mm	342 mm	345mm	617 mm	690 mm	620 mm	700 mm	702 mm	842 mm	835mm	992mm	1240mm
Filter width	86.5mm	86.5mm	128 mm	128 mm	140 mm	140mm	249 mm	249 mm	249 mm	249 mm	249 mm	249 mm	338mm	338mm	338mm
Cartridge Diameter (with O-ring)	47.5mm	47.5mm	70 mm	70 mm	70 mm	70mm	121 mm	121 mm	121 mm	121 mm	121 mm	121 mm	121mm	121mm	121mm
Cartridge Length	143.5mm	143.5mm	208 mm	208 mm	208 mm	208mm	300 mm	400 mm	300 mm	400 mm	400 mm	525 mm	300 mm X 2	400 mm X 2	525 mm X 2
Drain Valve	½" End Plug	¾" End Cap	¾" Plug Cap	¾" Plug Cap	½" End Plug	½" End Plug	¾"M x ¾"M valve	¾"M x ¾"M valve	¾"M x ¾"M valve	¾"M x ¾"M valve	¾"M x ¾"M valve	¾"M x ¾"M valve	¾"M x ¾"M valve	¾"M x ¾"M valve	¾"M x ¾"M valve

Y Type Screen Filters

AQ-121Y

AQ-122Y

Specifications	AQ-121Y		AQ-122Y	
	US Standard	Metric Standard	US Standard	Metric Standard
Inlet / outlet	¾″ NPT	¾″ BSP	1″ NPT male thread	1″BSP male thread
Maximum Operating Pressure	85 PSI	6 Kg/cm^2	85 PSI	6 Kg/cm^2
Range of Flow Rate	15-25 GPM	4-6 m^3/hr	22-35 GPM	5-8 m^3/hr
Nominal Flow Rate	20 GPM	5m^3/hr	30 GPM	7m^3/hr
Filtration Surface Area	18.6 in^2	120cm^2	18.6 in^2	120cm^2
Material of Construction	Polypropylene		Polypropylene	
Filtering Cartridge	304/316 Grade Stainless Steel Screen		304/316 Grade Stainless Steel Screen	
Cartridge Diameter	1.89 Inches	48mm	1.89 Inches	48 mm
Cartridge Length	5.95 Inches	151mm	5.95 Inches	151mm
Available Mesh	80, 120, 150 mesh	80, 120, 150 mesh	80, 120, 150 mesh	80, 120, 150 mesh

Filtering Element

- 80 Mesh
- 120 Mesh
- 150 Mesh

Head Loss : AQ-121Y						Head Loss : AQ-122Y						
Flow m^3/hr	2	3	4	5	6	Flow m^3/hr	4	5	6	7	8	9
Pressure Loss kg/cm^2	0.06	0.11	0.2	0.3	0.43	Pressure Loss kg/cm^2	0.20	0.26	0.33	0.45	0.55	0.69
Flow GPM	10	15	17	20	25	Flow GPM	17.6	22	26.4	30.8	35.2	39.6
Pressure Loss PSI	0.93	1.69	2.73	4.10	5.92	Pressure Loss PSI	2.84	3.69	4.68	6.39	7.81	9.80

Y Type Screen Filters

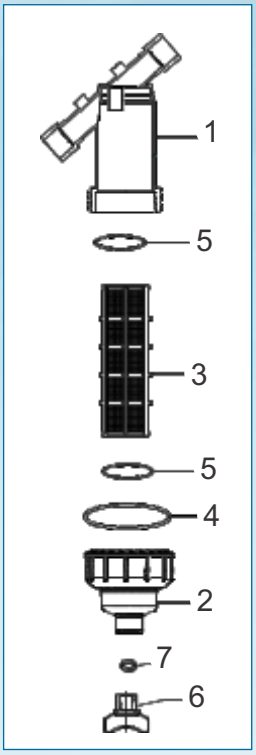

¾" Screen Filter (Model 121 Y -4-6 m^3/hr)				
AIPL CODE	DESCRIPTION	INLET/OUTLET	CONNECTION SIZE	MICRON /MESH
14310001	¾" Screen Filter Y Type 120 Mesh	Male Thread NPT	¾"	130/120
14040001	¾" Screen Filter Y Type 120 Mesh	Male Thread BSP	¾"	130/120

SPARE PARTS				
S. NO	PARTS NAME	PART CODE	MATERIAL	QTY
1	Body (BSP Thread)	12490042	PP	1
	Body (NPT Thread)	12490044		
2	Cap	12490046	PP	1
3	Screen Cartridge (80 Mesh) Black	14120023	Glass reinforced PP	1
	Screen Cartridge (120 Mesh) Blue	14120001		
	Screen Cartridge (150 Mesh) Red	14120012		
4	Cap O-Ring	50010044	NBR	1
5	Cartridge O-Ring	50010045/50010081	NBR	2
6	½ End Plug	12490051	Glass Reinforced Nylon	1
7	End Plug Washer	50020001	NBR	1

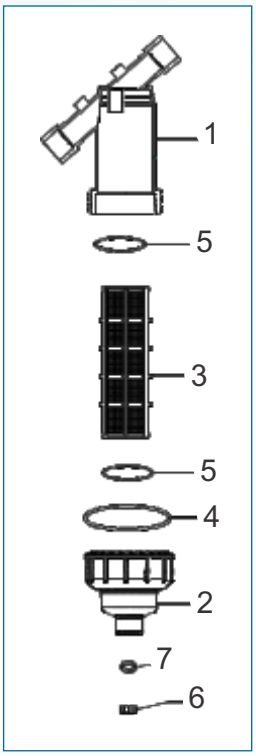

1" Screen Filter (Model 122 Y -5-8 m^3/hr)				
AIPL CODE	DESCRIPTION	INLET/OUTLET	CONNECTION SIZE	MICRON /MESH
14310002	1" Screen Filter Y Type 120 Mesh	Male Thread NPT	1"	130/120
14040002	1" Screen Filter Y Type 120 Mesh	Male Thread BSP	1"	130/120

SPARE PARTS				
S. NO	PARTS NAME	PART CODE	MATERIAL	QTY
1	Body (BSP Thread)	12490043	PP	1
	Body (NPT Thread)	12490045		
2	Cap	12490046	PP	1
3	Screen cartridge (80 mesh) Black	14120023	Glass reinforced PP	1
	Screen Cartridge (120 Mesh) Blue	14120001		
	Screen Cartridge (150 Mesh) Red	14120012		
4	Cap O-Ring	50010044	NBR	1
5	Cartridge O-Ring	50010045/50010081	NBR	2
6	¾" End Cap	12490057	PA	1
7	End Cap Washer	50020003	NBR	1

Y Type Screen Filters

AQ-123YF

AQ-123Y

Specifications	AQ-123YF		AQ-123Y	
	US Standard	Metric Standard	US Standard	Metric Standard
Inlet / outlet	1 ¼" NPT Female	1 ¼" BSP Female	1½" NPT	1½" BSP
Maximum Operating Pressure	85 PSI	6 Kg/cm^2	85 PSI	6 Kg/cm^2
Range of Flow Rate	50-70 GPM	12-16 m^3/hr	50-70 GPM	12-16 m^3/hr
Nominal Flow Rate	65 GPM	15m^3/hr	65 GPM	15m^3/hr
Filtration Surface Area	46 in^2	295cm^2	46 in^2	295cm^2
Material of Construction	Reinforced Polypropylene		Reinforced Polypropylene	
Filtering Cartridge	304/316 Grade Stainless Steel Screen		304/316 Grade Stainless Steel Screen	
Cartridge Diameter	2.8 Inches	70mm	2.8 Inches	70mm
Cartridge Length	8.7 Inches	222mm	8.7 Inches	222mm
Available Mesh	80, 120, 150 mesh	80, 120, 150 mesh	80, 120, 150 mesh	80, 120, 150 mesh

Filtering Element

- 80 Mesh
- 120 Mesh
- 150 Mesh

Head Loss : AQ-123YF					
Flow m^3/hr	9.6	12	15	16	19.2
Pressure Loss kg/cm^2	0.06	0.10	0.12	0.15	0.20
Flow GPM	42.0	50.0	65.0	70.0	85.0
Pressure Loss PSI	0.85	1.32	1.65	2	2.83

Head Loss : AQ-123Y					
Flow m^3/hr	9.6	12	15	16	19.2
Pressure Loss kg/cm^2	0.11	0.15	0.2	0.22	0.28
Flow GPM	42.0	50.0	65.0	70.0	85.0
Pressure Loss PSI	1.52	1.92	2.71	3.10	4.06

Y Type Screen Filters

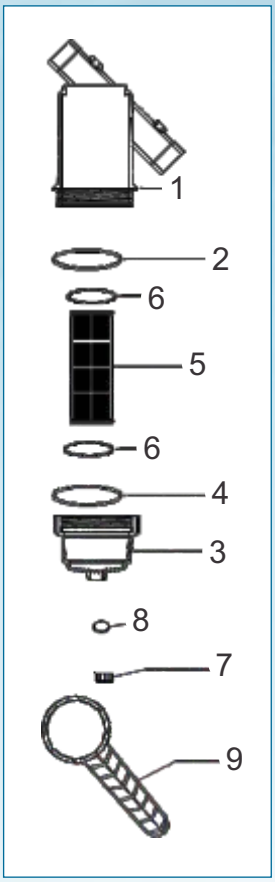

1 ¼" FEMALE TYPE Screen Filter (Model 123 YF - 15 m³/hr)				
AIPL CODE	DESCRIPTION	INLET/OUTLET	CONNECTION SIZE	MICRON /MESH
14140006	1 ¼" Screen Filter Y - Type 120 Mesh	Female Thread NPT	1 ¼"	130/120
14140007	1 ¼" Screen Filter Y - Type 120 Mesh	Female Thread BSP	1 ¼"	130/120
SPARE PARTS				
S. NO	PARTS NAME	PART CODE	MATERIAL	QTY
1	Body (BSP Thead) Without Hole	12490059	Glass reinforced PP	1
	Body (NPT Thead) Without Hole	12490060		
2	Body o-ring	50010050	NBR	1
3	Cap	12490063	Glass reinforced PP	1
4	Cap Gasket	50030025	NBR	1
5	Screen Cartridge (80 Mesh) Black	12490066	Glass reinforced PP	1
	Screen Cartridge (120 Mesh) Blue	12490064		
	Screen Cartridge (150 Mesh) Red	12490065		
6	Cartridge O-Ring	50010082	NBR	1
7	¾" End Cap	12490057	PA	1
8	End Cap Washer	50020003	NBR	1
9	Spanner (Key)	12490114	Glass reinforced PP	1

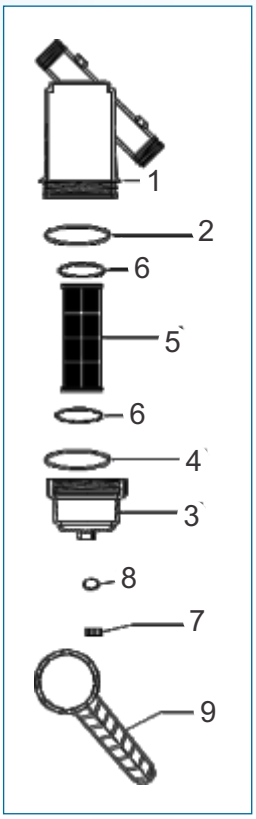

1 ½" Screen Filter (Model 123 Y - 15 m³/hr)				
AIPL CODE	DESCRIPTION	INLET/OUTLET	CONNECTION SIZE	MICRON /MESH
14310003	1 ½" Screen Filter Y - Type 120 Mesh	Male Thread NPT	1 ½"	130/120
14040003	1 ½" Screen Filter Y - Type 120 Mesh	Male Thread BSP	1 ½"	130/120
SPARE PARTS				
S. NO	PARTS NAME	PART CODE	MATERIAL	QTY
1	Body (BSP Thread) Without Hole	12490059	Glass reinforced PP	1
	Body (NPT Thread)without Hole	12490060		
2	Body O-Ring	50010050	NBR	1
3	Cap	12490063	Glass reinforced PP	1
4	Cap Gasket	50030025	NBR	1
5	Screen Cartridge (80 Mesh) Black	12490066	Glass reinforced PP	1
	Screen Cartridge (120 Mesh) Blue	12490064		
	Screen Cartridge (150 Mesh) Red	12490065		
6	Cartridge O-Ring	50010082	NBR	1
7	¾" End Cap	12490057	PA	1
8	End Cap Washer	50020003	NBR	1
9	Spanner (Key)	12490114	Glass reinforced PP	1

Y Type Screen Filters

AQ-124YS

AQ-124Y

Specifications	AQ-124YS		AQ-124Y	
	US Standard	Metric Standard	US Standard	Metric Standard
Inlet / outlet	2″ NPT	2″ BSP	2″ NPT	2″ BSP
Maximum Operating Pressure	85 PSI	6 Kg/cm^2	110 PSI	6 Kg/cm^2
Range of Flow Rate	80-95 GPM	18-22 m^3/hr	80-120 GPM	18-27 m^3/hr
Nominal Flow Rate	85 GPM	20m^3/hr	110 GPM	25m^3/hr
Filtration Surface Area	46 in^2	295cm^2	76 in^2	492cm^2
Material of Construction	Reinforced Polypropylene		Reinforced Polypropylene	
Filtering Cartridge	304/316 Grade Stainless Steel Screen		304/316 Grade Stainless Steel Screen	
Cartridge Diameter	2.7 Inches	69mm	4.3 Inches	109mm
Cartridge Length	8.7 Inches	222mm	11.3Inches	286mm
Available Mesh	80, 120, 150 mesh	80, 120, 150 mesh	80, 120, 150 mesh	80, 120, 150 mesh

Filtering Element

- 80 Mesh
- 120 Mesh
- 150 Mesh

Head Loss : AQ-124YS					
Flow m^3/hr	14.4	18	20	22	26.4
Pressure Loss kg/cm^2	0.17	0.25	0.3	0.34	0.43
Flow GPM	63.0	75.0	85.0	95.0	116.0
Pressure Loss PSI	2.36	3.25	3.93	4.68	6.05

Head Loss : AQ-124Y						
Flow m^3/hr	12	15	18	25	27	32.4
Pressure Loss kg/cm^2	0.03	0.07	0.1	0.2	0.24	0.34
Flow GPM	53.0	66.0	80.0	110.0	120.0	142.0
Pressure Loss PSI	0.43	0.99	1.47	2.84	3.29	4.73

Y Type Screen Filters

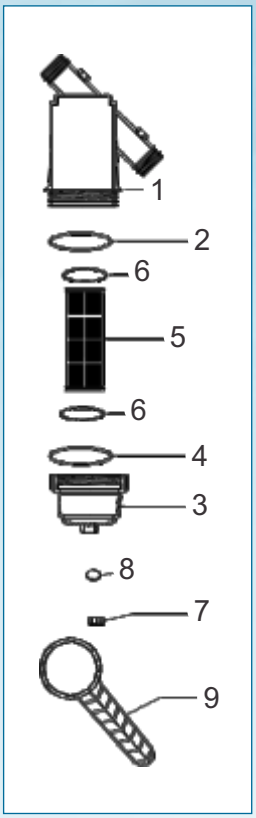

2" Screen Filter (Model 124 YS - 20 m³/hr)				
AIPL CODE	DESCRIPTION	INLET/OUTLET	CONNECTION SIZE	MICRON /MESH
14310004	2" Screen Filter Y - Type 120 Mesh	Male Thread NPT	2"	130/120
14040005	2" Screen Filter Y - Type 120 Mesh	Male Thread BSP	2"	130/120
SPARE PARTS				
S. NO	PARTS NAME	PART CODE	MATERIAL	QTY
1	Body (BSP Thread) Without Hole	12490061	Glass reinforced PP	1
	Body (NPT Thread) Without Hole	12490062		
2	Body O-Ring	50010050	NBR	1
3	Cap	12490063	Glass reinforced PP	1
4	Cap Gasket	50030025	NBR	1
5	Screen Cartridge (80 Mesh) Black	12490066	Glass reinforced PP	1
	Screen Cartridge (120 Mesh) Blue	12490064		
	Screen Cartridge (150 Mesh) Red	12490065		
6	Cartridge O-Ring	50010082	NBR	1
7	¾" End Cap	12490057	PA	1
8	End Cap Washer	50020003	NBR	1
9	Spanner (Key)	12490114	Glass reinforced PP	1

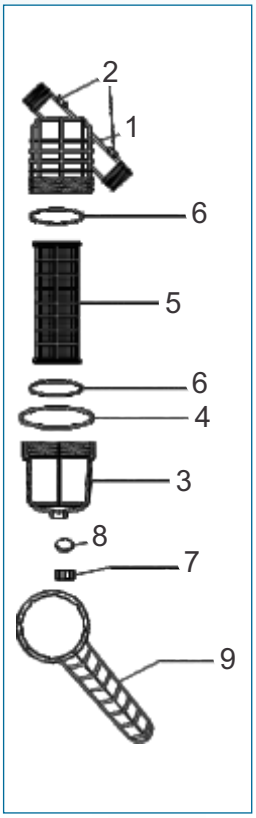

2" Screen Filter (Model 124 Y - 25 m³/hr)				
AIPL CODE	DESCRIPTION	INLET/OUTLET	CONNECTION SIZE	MICRON /MESH
14310005	2" Screen Filter Y Type 120 Mesh	Male Thread NPT	2"	130/120
14040004	2" Screen Filter Y Type 120 Mesh	Male Thread BSP	2"	130/120
SPARE PARTS				
S. NO	PARTS NAME	PART CODE	MATERIAL	QTY
1	Body (BSP Thead) Without Hole	12490052	Glass reinforced PP	1
	Body (NPT Thead) Without Hole	12490053		
2	Body O-ring	50100033	Brass	2
3	Cap	12490055	Glass reinforced PP	1
4	Cap Gasket	50030008	NBR	1
5	Screen Cartridge (80 Mesh) Black	12490031	Glass reinforced PP	1
	Screen Cartridge (120 Mesh) Blue	12490029		
	Screen Cartridge (150 Mesh) Red	12490032		
6	Cartridge O-Ring	50010086	NBR	2
7	¾" End Cap	12490057	PA	1
8	End Cap Washer	50020003	NBR	1
9	Spanner (Key)	50100014	Glass reinforced PP	1

Y Type Disc Filters

AQ-131Y

AQ-132Y

Specifications	AQ-131Y		AQ-132Y	
	US Standard	Metric Standard	US Standard	Metric Standard
Inlet/outlet connection	¾″ NPT male thread	¾″ BSP male thread	1″ NPT male thread	1″ BSP male thread
Maximum Operating Pressure	85Psi	6 kg/cm²	85Psi	6 kg/cm²
Range of Flow Rate	13 - 22 GPM	3 - 5 m³/h	22 - 35GPM	5 - 8 m³/h
Nominal Flow Rate	13GPM	3 m³/h	25 GPM	6 m³/h
Filtration Surface Area	22.86 in²	147.5 cm²	22.86 in²	147.5 cm²
Material of Construction	Reinforced Polypropylene		Reinforced Polypropylene	
Material of Disc	Polypropylene disc	Polypropylene Disc	Polypropylene disc	Polypropylene Disc
Cartridge Diameter	1.87 in	47.5mm	1.87 in	47.5 mm
Cartridge Length	5.65 in	143.5mm	5.65 in	143.5 mm
Available Mesh	120 mesh	120 mesh	120 mesh	120 mesh

Head Loss : AQ-131Y							
Flow m³/hr	1	2	3	4	5	6	7
Pressure Loss kg/cm²	0.1	0.2	0.4	0.55	0.8	1	1.4
Flow GPM	4.4	8.8	13.2	17.6	22	26.4	30.8
Pressure Loss PSI	1.42	2.84	5.68	7.81	11.36	14.2	19.88

Head Loss : AQ-132Y						
Flow m³/hr	4	5	6	7	8	9
Pressure Loss kg/cm²	0.24	0.30	0.40	0.53	0.63	0.79
Flow GPM	17.6	22	26.4	30.8	35.2	39.6
Pressure Loss PSI	3.40	4.26	5.68	7.53	8.95	11.22

Filtering Element 120 Mesh

Y Type Disc Filters

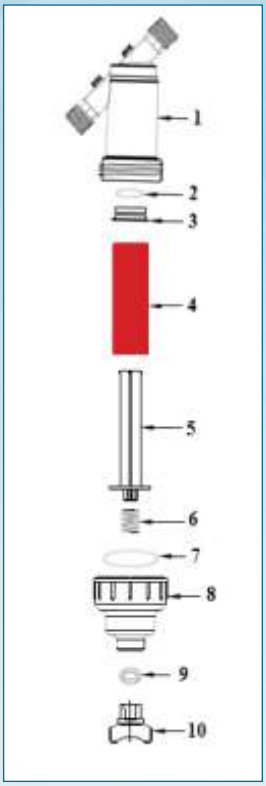

¾" Disc Filter (Model 131 Y -4-6 m^3/hr)				
AIPL CODE	DESCRIPTION	INLET/OUTLET	CONNECTION SIZE	MICRON /MESH
14000040	¾" DISC FILTER BSP	Male Threaded BSP	¾"	130/120
14000044	¾" DISC FILTER NPT	Male Threaded NPT	¾"	130/120
SPARE PARTS				
S. NO	PARTS NAME	PART CODE	MATERIAL	QTY
1	Body (BSP Thread)	12490207	Glass Reinforced PP	1
	Body (NPT Thread)	12490208	Glass Reinforced Nylon	1
2	Houing O-ring	50010020	NBR	1
3	Disc housing cap	12490205	Glass Reinforced PP	1
4	Filter Disc -120 mesh	50100641	PP	105
5	Y Disc housing body	12490204	Glass Reinforced PP	1
6	1" Filte body Spring	50390059	SS-304	1
7	Cap O-ring	50010044	NBR	1
8	Top Cap	12490046	Glass Reinforced PP	1
	Top cap	12490194	Glass Reinforced Nylon	1
9	End plug O-ring	50010067	NBR	1
10	½" End Plug	12490051	Glass Reinforced Nylon	1

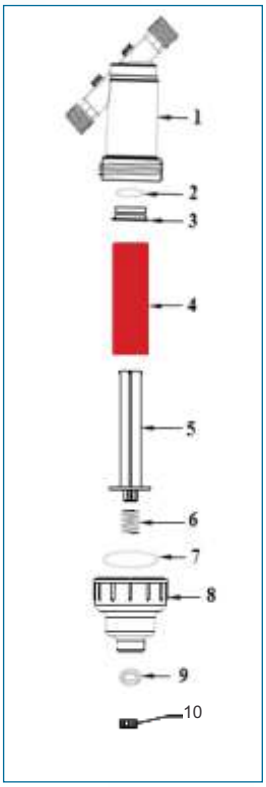

1" Disc Filter (Model 132Y - 5 - 8 m3/hr)				
AIPL CODE	DESCRIPTION	INLET/OUTLET	CONNECTION SIZE	MICRON /MESH
14000042	1" DISC FILTER BSP	Male Threaded BSP	1"	130/120
14000043	1" DISC FILTER NPT	Male Threaded NPT	1"	130/120
SPARE PARTS				
S. NO	PARTS NAME	PART CODE	MATERIAL	QTY
1	Body (BSP Thread)	12490209	Glass Reinforced PP	1
	Body (NPT Thread)	12490210	Glass Reinforced Nylon	1
2	Houing O-ring	50010020	NBR	1
3	Disc housing cap	12490205	Glass Reinforced PP	1
4	Filter Disc -120 mesh	50100641	PP	105
5	Y Disc housing body	12490204	Glass Reinforced PP	1
6	1" Filte body Spring	50390059	SS-304	1
7	Cap O-ring	50010044	NBR	1
8	Top Cap	12490046	Glass Reinforced PP	1
	Top Cap	12490194	Glass Reinforced Nylon	1
9	¾" End Cap Washer	50010067	NBR	1
10	¾" End Cap	12490057	PA	1

Y Type Disc Filters

AQ-133YM

AQ-134YS

Specifications	AQ-133YM		AQ-134YS	
	US Standard	Metric Standard	US Standard	Metric Standard
Inlet/outlet connection	1¼" NPT Female thread	1½" BSP male thread	2" NPT male thread	2" BSP male thread
Maximum Operating Pressure	85Psi	6 kg/cm²	85Psi	6 kg/cm²
Range of Flow Rate	50 - 70 GPM	12 – 16 m³/h	80 - 95 GPM	18 – 22 m³/h
Nominal Flow Rate	65 GPM	15 m³/h	85 GPM	20 m³/h
Filtration Surface Area	63.4 in²	409 cm²	63.4 in²	409 cm²
Material of Construction	Reinforced Polypropylene		Reinforced Polypropylene	
Material of Disc	Polypropylene disc		Polypropylene Disc	
Cartridge Diameter	2.76 in	70mm	2.76 in	70mm
Cartridge Length	8.19 in	208mm	8.19 in	208mm
Available Mesh	120mesh	120mesh	120mesh	120mesh

Head Loss : AQ - 133YM							
Flow m³/hr	9.6	12	14.4	15	16	18	19.2
Pressure Loss kg/cm²	0.09	0.16	0.22	0.23	0.26	0.33	0.37
Flow GPM	42.24	52.8	63.36	66	70.4	79.2	84.48
Pressure Loss PSI	1.28	2.27	3.12	3.27	3.69	4.69	5.25

Head Loss : AQ - 134 YS							
Flow m³/hr	15	16	18	19.2	20	22	26.4
Pressure Loss kg/cm²	0.23	0.26	0.33	0.37	0.4	0.47	0.65
Flow GPM	66	70.4	79.2	84.48	88	96.8	116.16
Pressure Loss PSI	3.27	3.69	4.69	5.25	5.68	6.67	9.23

Filtering Element 120 Mesh

Y Type Disc Filters

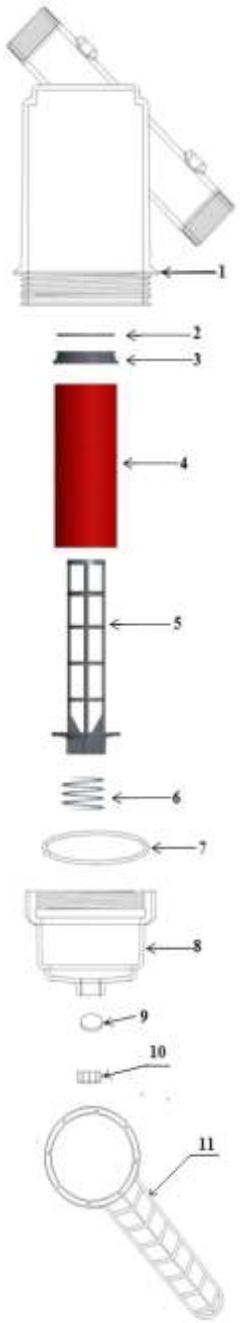

1½" Disc Filter (Model 133 YM - 15 m³/hr)				
AIPL CODE	DESCRIPTION	INLET/OUTLET	CONNECTION SIZE	MICRON /MESH
14000049	1½" Disc Filter Y - Type 120 Mesh	Male Threaded NPT	½"	130/120
14000047	1½" Disc Filter Y - Type 120 Mesh	Male Threaded BSP	½"	130/120

SPARE PARTS				
S. NO	PARTS NAME	PART CODE	MATERIAL	QTY
1	133YM Filter Body BSP without hole BSP	12490239	Glass Reinforced PP	1
	133YM Filter Body BSP without hole NPT	12490240		1
2	Disc housing O-ring	50100761	NBR	1
3	Disc housing cap	12490236	Glass Reinforced PP	1
4	Filter Disc	50100772	PP	172
5	Disc Housing	12490235	Glass Reinforced PP	1
6	Disc Housing Spring	50390068	SS-304	1
7	Top Cap Washer	50020003	NBR	1
8	Top Cap	12490063	Glass Reinforced PP	1
9	End Cap Washer	50020002	NBR	1
10	End cap	12490057	NYLON 6	1
11	Filter key	12490114	Glass Reinforced PP	1

2" Disc Filter (Model 134 YS - 20 m³/hr)				
AIPL CODE	DESCRIPTION	INLET/OUTLET	CONNECTION SIZE	MICRON /MESH
14000050	2" Disc Filter Y - Type 120 Mesh	Male Threaded NPT	2"	130/120
14000048	2" Disc Filter Y - Type 120 Mesh	Male Threaded BSP	2"	130/120

SPARE PARTS				
S. NO	PARTS NAME	PART CODE	MATERIAL	QTY
1	134YS Filter Body BSP without hole BSP	12490241	Glass Reinforced PP	1
	134YS Filter Body BSP without hole NPT	12490242		1
2	Disc housing O-ring	50100761	NBR	1
3	Disc housing cap	12490236	Glass Reinforced PP	1
4	Eco Filter Disc	50100772	PP	170
5	Disc Housing	12490235	Glass Reinforced PP	1
6	Disc Housing Spring	50390068	SS-304	1
7	Top Cap Washer	50020003	NBR	1
8	Top Cap	12490063	Glass Reinforced PP	1
9	End Cap Washer	50020002	NBR	1
10	End cap	12490057	NYLON 6	1
11	Filter key	12490114	Glass Reinforced PP	1

Mini T Type Screen Filters

AQ-123T

AQ-124TM

Specifications	AQ-123T		AQ-124TM	
	US Standard	Metric Standard	US Standard	Metric Standard
Inlet/outlet connection	1½" NPT male thread	1½" BSP male thread	2" NPT male thread	2" BSP male thread
Maximum Operating Pressure	85Psi	6 kg/cm²	85Psi	6 kg/cm²
Range of Flow Rate	50 - 70 GPM	12 – 16 m³/h	80 - 95 GPM	18 – 22 m³/h
Nominal Flow Rate	65 GPM	15 m³/h	85 GPM	20 m³/h
Filtration Surface Area	46 in²	295 cm²	46 in²	295 cm²
Material of Construction	Reinforce Polypropylene		Reinforce Polypropylene	
Screen Material	Stainless Steel SS-316		Stainless Steel SS-316	
Cartridge Diameter	2.76 in	70mm	2.76 in	70 mm
Cartridge Length	8.82 in	224mm	8.82 in	224 mm
Available Mesh	80, 120, 150 mesh	80, 120, 150 mesh	80, 120, 150 mesh	80, 120, 150 mesh

Filtering Element

- 80 Mesh
- 120 Mesh
- 150 Mesh

Head Loss : AQ - 123T					
Flow m³/hr	10	14.4	15	18	20
Pressure Loss kg/cm²	0.06	0.16	0.20	0.34	0.42
Flow GPM	44	63.36	66	79.2	88
Pressure Loss PSI	0.85	2.27	2.84	4.83	5.96

Head Loss : AQ - 124 TM						
Flow m³/hr	15	18	20	22	25	26.4
Pressure Loss kg/cm²	0.20	0.34	0.42	0.48	0.60	0.64
Flow GPM	66	79.2	88	96.8	110	116.16
Pressure Loss PSI	2.84	4.83	5.96	6.82	8.52	9.09

Mini T Type Screen Filters

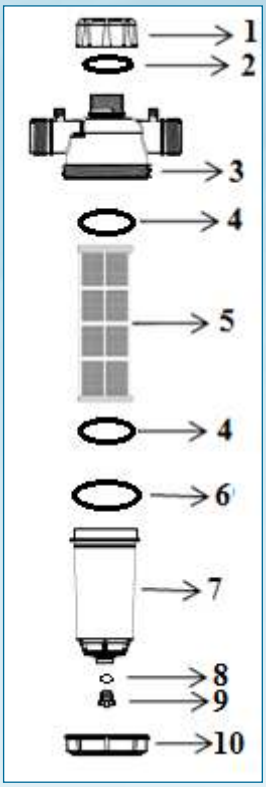

1½" T type Screen Filter (Model 123 T - 15 m³/hr)				
AIPL CODE	DESCRIPTION	INLET/OUTLET	CONNECTION SIZE	MICRON /MESH
14140009	1½" T type Scree Filter - 120 Mesh	Male Threaded NPT	1½"	130/120
14000051	1½" T-type Screen Filter - 120 Mesh	Male Threaded BSP	1½"	130/120

SPARE PARTS				
S. NO	PARTS NAME	PART CODE	MATERIAL	QTY
1	End cap (1½")	12530025	Glass Reinforced PP	1
2	End cap (1½") O-ring	50010054	NBR	1
3	Filter Body BSP	12490230	Glass Reinforced PP	1
	Filter Body NPT	12490231		
4	Cartridge O-ring (1½")	50010049	NBR	2
5	Cartridge - 120 mesh (1½" FILTER)	12490064	Glass Reinforced PP	1
6	Barrel O-ring	50010128	NBR	1
7	Barrel	12490236	Glass Reinforced PP	1
8	End plug O-ring	50010067	NBR	1
9	½" End Plug	12490238	Glass Reinforced PP	1
10	Filter Ring	12490237	Glass Reinforced PP	1

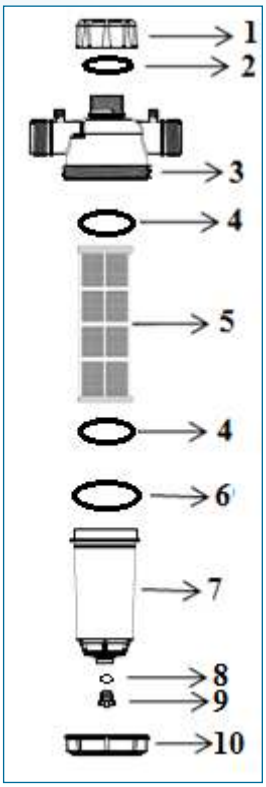

2" T-type Screen Filter (Model 124 TM - 20 m³/hr)				
AIPL CODE	DESCRIPTION	INLET/OUTLET	CONNECTION SIZE	MICRON /MESH
14140011	2" T-type Screen Filter - 120 Mesh	Male Threaded NPT	2"	130/120
14000052	2" T-type Screen Filter - 120 Mesh	Male Threaded BSP	2"	130/120

SPARE PARTS				
S. NO	PARTS NAME	PART CODE	MATERIAL	QTY
1	End Cap (2" BSP)	12490027	Glass Reinforced PP	1
2	End cap O-ring	50010043	NBR	1
3	Filter Body BSP	12490232	Glass Reinforced PP	1
	Filter Body NPT	12490233		
4	Cartridge O-ring (1½")	50010049	NBR	2
5	Cartridge 120 mesh (1½" FILTER)	12490064	Glass Reinforced PP	1
6	Barrel O-ring	50010128	NBR	1
7	Eco Filter Barrel	12490236	Glass Reinforced PP	1
8	End plug O-ring	50010067	NBR	1
9	½" End Plug	12490238	Glass Reinforced PP	1
10	Filter Ring	12490237	Glass Reinforced PP	1

Mini T Type Disc Filters

AQ-133T

AQ-134TM

Specifications	AQ-133T		AQ-134TM	
	US Standard	Metric Standard	US Standard	Metric Standard
Inlet/outlet connection	1½" NPT male thread	1½" BSP male thread	2" NPT male thread	2" BSP male thread
Maximum Operating Pressure	85Psi	6 kg/cm²	85Psi	6 kg/cm²
Range of Flow Rate	50 - 70 GPM	12 – 16 m³/h	80 - 95 GPM	18 – 22 m³/h
Nominal Flow Rate	65 GPM	15 m³/h	85 GPM	20 m³/h
Filtration Surface Area	63.4 in²	409 cm²	63.4 in²	409 cm²
Material of Construction	Reinforce Polypropylene		Reinforce Polypropylene	
Screen Material	Polypropylene disc		Polypropylene disc	
Cartridge Diameter	2.76 in	70mm	2.76 in	70mm
Cartridge Length	8.19 in	208mm	8.19 in	208mm
Available Mesh	120mesh	120mesh	120mesh	120mesh

Head Loss : AQ - 133T								
Flow m³/hr	9.6	10	12	14.4	15	16	18	19.2
Pressure Loss kg/cm²	0.07	0.09	0.16	0.24	0.27	0.32	0.40	0.45
Flow GPM	42.24	44	52.8	63.36	66	70.4	79.2	84.48
Pressure Loss PSI	0.99	1.28	2.27	3.41	3.83	4.54	5.68	6.39

Head Loss : AQ - 134 TM								
Flow m³/hr	15	16	18	19.2	20	22	25	26.4
Pressure Loss kg/cm²	0.27	0.32	0.40	0.45	0.49	0.58	0.76	0.85
Flow GPM	66	70.4	79.2	84.48	88	96.8	110	116.16
Pressure Loss PSI	3.83	4.54	5.68	6.39	6.96	8.23	10.79	12.07

Filtering Element 120 Mesh

Mini T Type Disc Filters

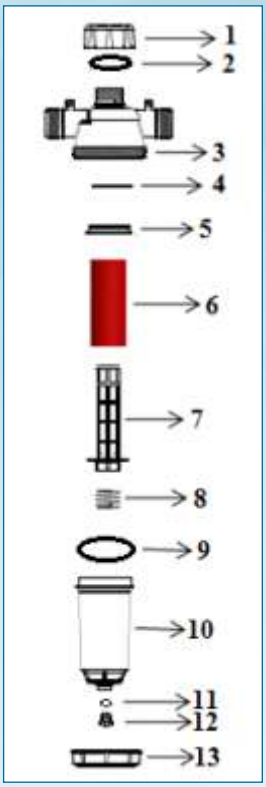

1½" T type Disc Filter (Model 133 T - 15 m³/hr)				
AIPL CODE	DESCRIPTION	INLET/OUTLET	CONNECTION SIZE	MICRON /MESH
14000057	1½" T type Disc Filter - 120 Mesh	Male Threaded NPT	1½"	130/120
14000054	1½" T-type Disc Filter - 120 Mesh	Male Threaded BSP	1½"	130/120

SPARE PARTS				
S. NO	PARTS NAME	PART CODE	MATERIAL	QTY
1	Filter End Cap (1½")	12530025	Glass Reinforced PP	1
2	Filter End Cap (1½") O-ring	50010054	NBR	1
3	Filter Body BSP	12490230	Glass Reinforced PP	1
	Filter Body NPT	12490231		
4	Disc housing O-ring	50010049	NBR	1
5	Disc housing cap	12490236	Glass Reinforced PP	1
6	Filter Disc	50100772	PP	170
7	Filter Disc Housing	12490235	Glass Reinforced PP	1
8	Filter Disc Housing Spring	50390068	SS-304	1
9	Barrel O-ring	50010128	NBR	1
10	Filter Barrel	12490236	Glass Reinforced PP	1
11	½" End plug O-ring	50010067	NBR	1
12	½" End Plug	12490238	Glass Reinforced PP	1
13	Filter Ring	12490237	Glass Reinforced PP	1

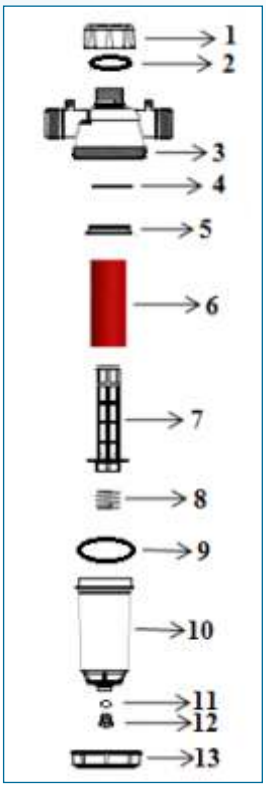

2" T-type Disc Filter (Model 134 TM - 20 m³/hr)				
AIPL CODE	DESCRIPTION	INLET/OUTLET	CONNECTION SIZE	MICRON /MESH
14000059	2" T-type Disc Filter Y - 120 Mesh	Male Threaded NPT	2"	130/120
14000053	2" T-type Screen Filter - 120 Mesh	Male Threaded BSP	2"	130/120

SPARE PARTS				
S. NO	PARTS NAME	PART CODE	MATERIAL	QTY
1	Filter End Cap (2" BSP)	12490027	Glass Reinforced PP	1
2	Filter end cap O-ring	50010043	NBR	1
3	Filter Body BSP	12490232	Glass Reinforced PP	1
	Filter Body NPT	12490233		
4	Disc housing O-ring	50010049	NBR	1
5	Disc housing cap	12490236	Glass Reinforced PP	1
6	Filter Disc	50100772	PP	170
7	Filter Disc Housing	12490235	Glass Reinforced PP	1
8	Filter Disc Housing Spring	50390068	SS-304	1
9	Barrel O-ring	50010128	NBR	1
10	Filter Barrel	12490236	Glass Reinforced PP	1
11	½" End plug O-ring	50010067	NBR	1
12	½" End Plug	12490238	Glass Reinforced PP	1
13	Filter Ring	12490237	Glass Reinforced PP	1

T Type Screen Filters

AQ-124T(HC)

Max. Operating Pressure	6 Kg/cm²
Clamp Material	Nylon Reinforced
Vacuum Breaker	For upside up installation
Drain port location	Front of the filter Body
Flow passes through outside to inside screen filter mesh.	

AQ-124T

Max. Operating Pressure	8 Kg/cm²
Clamp Material	Stainless Steel
Vacuum Breaker	Not fit with this design
Drain port location	Below the Filter barrel
Flow passes through inside to outside screen filter mesh.	

Specifications	AQ-124T(HC)		AQ-124T	
	US Standard	Metric Standard	US Standard	Metric Standard
Inlet / outlet	2″ NPT Female thread	2″ BSP male thread	2″ NPT male thread	2″ BSP male thread
Max. Operating Pressure	85Psi	6 kg/cm²	110 Psi	8 kg/cm²
Range of Flow Rate	85 - 120 GPM	20 – 27 m³/h	85 - 120 GPM	20 – 27 m³/h
Nominal Flow Rate	110 GPM	25 m³/h	110 GPM	25 m³/h
Filtration Surface Area	74.4 in²	480 cm²	85.8 in²	554 cm²
Material of Construction	Rainforced Polypropylene		Rainforced Polypropylene	
Filtering Cartridge	Stainless Steel SS-316		Stainless Steel SS-316	
Cartridge Diameter	4.8 in	122 mm	4.8 in	122mm
Cartridge Length	9.92 in	252 mm	9.92 in	252 mm
Available Mesh	80, 120, 150 mesh	80, 120, 150 mesh	80, 120, 150 mesh	80, 120, 150 mesh

Filtering Element

- 80 Mesh
- 120 Mesh
- 150 Mesh

Head Loss : AQ-124T(HC)

Flow m³/hr	16	20	25	27	32.4
Pressure Loss kg/cm²	0.03	0.08	0.15	0.17	0.20
Flow GPM	70.0	85.0	110.0	120.0	142.0
Pressure Loss PSI	0.43	0.97	2.13	2.48	2.84

Head Loss : AQ-124T

Flow m³/hr	16	20	25	27	32.4
Pressure Loss kg/cm²	0.03	0.08	0.18	0.21	0.27
Flow GPM	70.0	85.0	110.0	120.0	142.0
Pressure Loss PSI	0.28	0.97	2.56	3.11	3.72

T Type Screen Filters

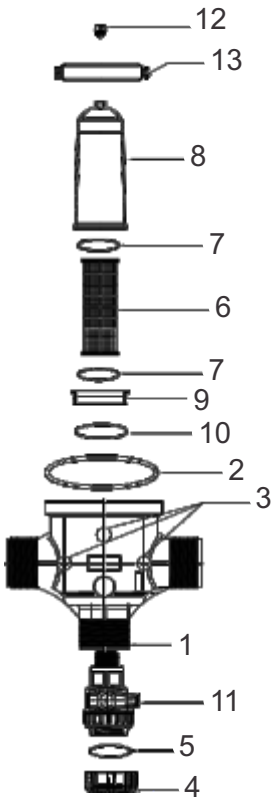

2" Screen Filter (Model 124 T(HC) - 25 m³/hr)				
AIPL CODE	DESCRIPTION	INLET/OUTLET	CONNECTION SIZE	MICRON /MESH
14320019	2" Screen Filter T Type (with Hybrid Clamp)120mesh	Male Thread NPT	2"	130/120
14050080	2" Screen Filter T Type (with Hybrid Clamp)120mesh	Male Thread BSP	2"	130/120
14460001	2" Screen Filter T Type (with Hybrid Clamp)120mesh	Victaulic Connection	2"	130/120
SPARE PARTS				
S. NO	PARTS NAME	PART CODE	MATERIAL	QTY
1	Body (BSP Thread)	12490023	Glass reinforced PP	1
	Body (NPT Thread)	12490101		
	Body (Victaulic Connection)	12490104		
2	Gasket	50030031	NBR	1
3	Brass Bush	50100033	Brass	3
4	End Cap (BSP Thread)	12490027	Glass reinforced PP	1
	End Cap (NPT Thread)	12490028		
5	End cap O-Ring	50010043	NBR	1
6	SS-316 Screen Cartridge Single Mesh 80 - Black	12490171	Glass reinforced PP	1
	SS-316 Screen Cartridge Single Mesh120 - Blue	12490183		
	SS-316 Screen Cartridge Single Mesh150 - Red	12490184		
7	Cartridge O-Ring	50010040	NBR	2
8	Barrel	12490008	Glass reinforced PP	1
9	Adopter	12490019	Glass reinforced PP	1
10	Adopter O-Ring	50010087	NBR	1
11	¾"x¾" Fxm Ball Valve	19070001	PP	1
12	¾" Vacuum Breaker	25100051	Glass reinforced PP	1
13	Hybrid Clamp Assly (ss Long Handle)	14050038	Glass reinforced PA	1

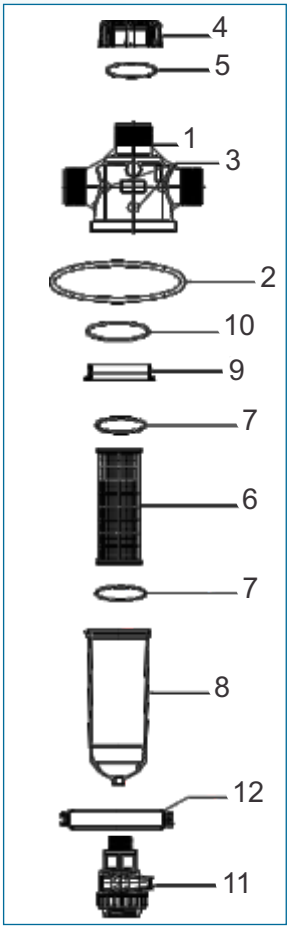

2" Screen Filter (Model 124 T - 25 m³/hr)				
AIPL CODE	DESCRIPTION	INLET/OUTLET	CONNECTION SIZE	MICRON /MESH
14310007	2" Screen Filter T-Type (With SS Clamp) 120 Mesh	Male Thread NPT	2"	130/120
14100002	2" Screen Filter T-Type (With SS Clamp) 120 Mesh	Male Thread BSP	2"	130/120
14450001	2" Screen Filter T-Type (With SS Clamp) 120 Mesh	Victaulic Connection	2"	130/120
SPARE PARTS				
S. NO	PARTS NAME	PART CODE	MATERIAL	QTY
1	Body (BSP Thread)	12490023	Glass reinforced PP	1
	Body (NPT Thread)	12490101		
	Body (Victaulic Connection)	12490104		
2	Gasket	50030031	NBR	1
3	Brass Bush	50100033	Brass	3
4	End Cap (BSP Thread)	12490027	Glass reinforced PP	1
	End Cap (NPT Thread)	12490028		
5	End cap O-Ring	50010043	NBR	1
6	SS-316 Screen Cartridge Double Mesh 30/80 - Black	12490029	Glass reinforced PP	1
	SS-316 Screen Cartridge Double Mesh 30/120 - Blue	12490031		
	SS-316 Screen Cartridge Double Mesh 30/150 - Red	12490032		
7	Cartridge O-Ring	50010040	NBR	2
8	Barrel	12490008	Glass reinforced PP	1
9	Adopter	12490019	Glass reinforced PP	1
10	Adopter O-Ring	50010087	NBR	1
11	¾"x¾" Fxm Ball Valve	19070001	PP	1
12	SS Clamp (Long Handle)	14010060	SS 304	1

T Type Screen Filters

AQ-124TL(HC)

Max. Operating Pressure	6 Kg/cm^2
Clamp Material	Nylon Reinforced
Vacuum Breaker	For upside up installation
Drain port location	Front of the filter Body
Flow passes through outside to inside screen filter mesh.	

AQ-124TL

Max. Operating Pressure	8 Kg/cm^2
Clamp Material	Stainless Steel
Vacuum Breaker	Not fit with this design
Drain port location	Below the Filter barrel
Flow passes through inside to outside screen filter mesh.	

Specifications	AQ-124TL(HC)		AQ-124TL	
	US Standard	Metric Standard	US Standard	Metric Standard
Inlet / outlet	2″ NPT Female thread	2″ BSP male thread	2″ NPT male thread	2″ BSP male thread
Max. Operating Pressure	85Psi	6 kg/cm^2	110 Psi	8 kg/cm^2
Range of Flow Rate	110 - 140 GPM	25 – 32 m^3/h	110 - 140 GPM	25 – 32m^3/h
Nominal Flow Rate	130 GPM	30 m^3/h	130 GPM	30 m^3/h
Filtration Surface Area	116.8 in^2	754 cm^2	128.8 in^2	831 cm^2
Material of Construction	Rainforced Polypropylene		Rainforced Polypropylene	
Screen Material	Stainless Steel SS-316		Stainless Steel SS-316	
Cartridge Diameter	4.76 in	121 mm	4.76 in	121 mm
Cartridge Length	14.8 in	377mm	15 in	382 mm
Available Mesh	80, 120, 150 mesh	80, 120, 150 mesh	80, 120, 150 mesh	80, 120, 150 mesh

Filtering Element

- 80 Mesh
- 120 Mesh
- 150 Mesh

Head Loss : AQ-124TL(HC)						
Flow m^3/hr	20	25	30	35	40	45
Pressure Loss kg/cm^2	0.07	0.13	0.16	0.20	0.30	0.35
Flow GPM	85.0	110.0	132.0	155.0	175.0	200.0
Pressure Loss PSI	0.78	1.85	2.28	2.84	4.21	5.12

Head Loss : AQ-124TL						
Flow m^3/hr	20	25	30	35	40	45
Pressure Loss kg/cm^2	0.10	0.15	0.20	0.26	0.35	0.42
Flow GPM	85.0	110.0	132.0	155.0	175.0	200.0
Pressure Loss PSI	1.18	2.13	2.84	3.57	4.88	6.12

T Type Screen Filters

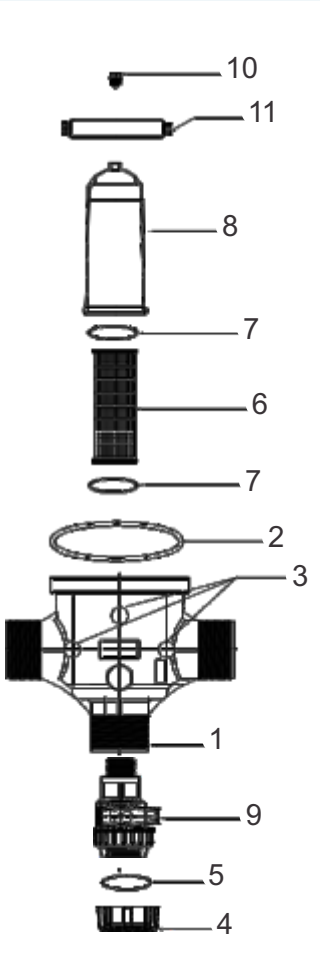

2" Screen Filter (Model 124 TL(HC) - 30 m³/hr)				
AIPL CODE	DESCRIPTION	INLET/OUTLET	CONNECTION SIZE	MICRON /MESH
14320020	2" Screen Filter T-Type (With Hybrid Clamp) 120 Mesh	Male Thread NPT	2"	130/120
14050081	2" Screen Filter T-Type (With Hybrid Clamp) 120 Mesh	Male Thread BSP	2"	130/120
14460002	2" Screen Filter T-Type (With Hybrid Clamp) 120 Mesh	Victaulic Connection	2"	130/120
SPARE PARTS				
S. NO	PARTS NAME	PART CODE	MATERIAL	QTY
1	Body (BSP Thread)	12490023	Glass reinforced PP	1
	Body (NPT Thread)	12490101		
	Body (Victaulic Connection)	12490104		
2	Gasket	50030031	NBR	1
3	Brass Bush	50100033	Brass	3
4	End Cap (BSP Thread)	12490027	Glass reinforced PP	1
	End Cap (NPT Thread)	12490028		
5	End Cap O-Ring	50010039	NBR	1
6	SS-316 Screen Cartridge Single Mesh 80 - Black	12490172	Glass reinforced PP	1
	SS-316 Screen Cartridge Single Mesh 120 - Blue	12490174		
	SS-316 Screen Cartridge Single Mesh 150 - Red	12490175		
7	Cartridge O-Ring	50010040	NBR	2
8	Barrel	12490116	Glass reinforced PP	1
9	¾"x¾" FXM Ball Valve	19070001	PP	1
10	¾" Vacuum Breaker	25100051	Glass reinforced PP	1
11	Hybrid Clamp (SS Long Handle)	14050038	Glass reinforced PA	1

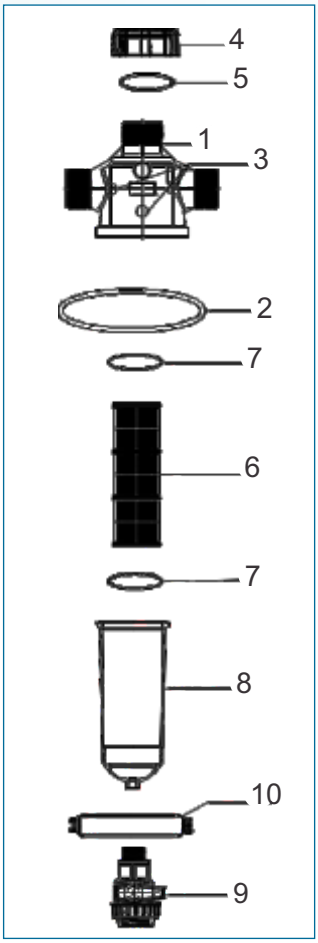

2" Screen Filter (Model 124 TL - 30 m³/hr)				
AIPL CODE	DESCRIPTION	INLET/OUTLET	CONNECTION SIZE	MICRON /MESH
14330022	2" Screen Filter T-Type (With SS Clamp) 120 Mesh	Male Thread NPT	2"	130/120
14100039	2" Screen Filter T-Type (With SS Clamp) 120 Mesh	Male Thread BSP	2"	130/120
14450002	2" Screen Filter T-Type (With SS Clamp) 120 Mesh	Victaulic Connection	2"	130/120
SPARE PARTS				
S. NO	PARTS NAME	PART CODE	MATERIAL	QTY
1	Plain body (BSP Thread)	12490023	Glass reinforced PP	1
	Plain body (NPT Thread)	12490101		
	Plain body (Victaulic Connection)	12490104		
2	Gasket	50030031	NBR	1
3	Brass Bush	50100033	Brass	3
4	End Cap (BSP Thread)	12490027	Glass reinforced PP	1
	End Cap (NPT Thread)	12490028		
5	End cap O-Ring	50010039	NBR	1
6	SS-316 Screen Cartridge Double Mesh 30/80 - Black	12490073	Glass reinforced PP	1
	SS-316 Screen Cartridge Double Mesh 30/120 - Blue	12490071		
	SS-316 Screen Cartridge Double Mesh 30/150 - Red	12490074		
7	Cartridge O-Ring	50010040	NBR	2
8	Barrel	12490116	Glass reinforced PP	1
9	¾" x ¾" FXM Ball Valve	19070001	PP	1
10	SS Clamp (Long Handle)	14010060	SS 304	1

T Type Screen Filters

AQ-125T(HC)

Max. Operating Pressure	6 Kg/cm²
Clamp Material	Nylon Reinforced
Vacuum Breaker	For upside up installation
Drain port location	Front of the filter Body
Flow passes through outside to inside screen filter mesh.	

AQ-125T

Max. Operating Pressure	8 Kg/cm²
Clamp Material	Stainless Steel
Vacuum Breaker	Not fit with this design
Drain port location	Below the Filter barrel
Flow passes through inside to outside screen filter mesh.	

Specifications	AQ-125T(HC)		AQ-125T	
	US Standard	Metric Standard	US Standard	Metric Standard
Inlet / outlet	2½" NPT male thread	2½" BSP male thread	2½" NPT male thread	2½" BSP male thread
Max. Operating Pressure	85Psi	6 kg/cm²	110 Psi	8 kg/cm²
Range of Flow Rate	120 - 155 GPM	27 – 35 m³/h	120 - 155 GPM	27 – 35 m³/h
Nominal Flow Rate	130 GPM	30 m³/h	130 GPM	30 m³/h
Filtration Surface Area	74.4 in²	480 cm²	85.8 in²	554 cm²
Material of Construction	Rainforced Polypropylene		Rainforced Polypropylene	
Screen Material	Stainless Steel SS-316		Stainless Steel SS-316	
Cartridge Diameter	4.8 in	122 mm	4.8 in	122 mm
Cartridge Length	9.92 in	252 mm	9.92 in	252 mm
Available Mesh	80, 120, 150 mesh	80, 120, 150 mesh	80, 120, 150 mesh	80, 120, 150 mesh

Filtering Element

- 80 Mesh
- 120 Mesh
- 150 Mesh

Head Loss : AQ-125T(HC)					
Flow m³/hr	21.6	27	30	35	42
Pressure Loss kg/cm²	0.06	0.10	0.15	0.20	0.28
Flow GPM	95.0	115.0	132.0	155.0	185.0
Pressure Loss PSI	0.85	1.22	2.13	2.94	3.98

Head Loss : AQ-125T					
Flow m³/hr	21.6	27	30	35	42
Pressure Loss kg/cm²	0.08	0.14	0.18	0.24	0.33
Flow GPM	95.0	115.0	132.0	155.0	185.0
Pressure Loss PSI	1.14	1.66	2.56	3.51	4.72

T Type Screen Filters

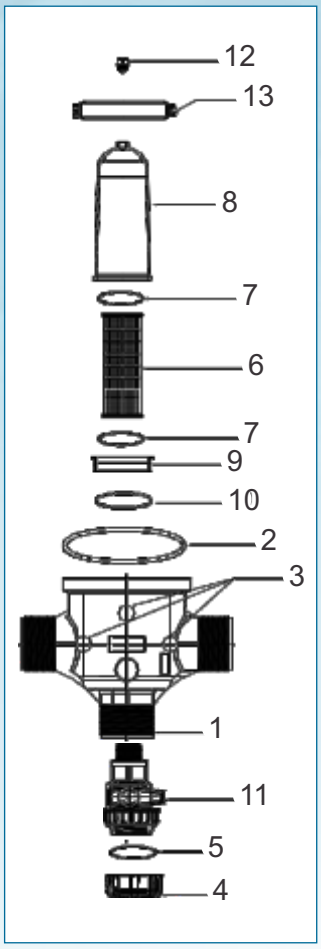

2 ½" Screen Filter (Model 125 T(HC) - 30 m³/hr)				
AIPL CODE	DESCRIPTION	INLET/OUTLET	CONNECTION SIZE	MICRON /MESH
14320021	2½" Screen Filter T-Type (With Hybrid Clamp) 120 Mesh	Male Thread NPT	2½"	130/120
14050082	2½" Screen Filter T-Type (With Hybrid Clamp) 120 Mesh	Male Thread BSP	2½"	130/120
SPARE PARTS				
S. NO	PARTS NAME	PART CODE	MATERIAL	QTY
1	Body (BSP Thread)	12490077	Glass reinforced PP	1
	Body (NPT Thread)	12490126		
2	Gasket	50030031	NBR	1
3	Brass Bush	50100033	Brass	3
4	End Cap (BSP Thread)	12490120	Glass reinforced PP	1
	End Cap (NPT Thread)	12490129		
5	End cap O-Ring	50010041	NBR	1
6	SS-316 Screen Cartridge Single Mesh 80 - Black	12490183	Glass reinforced PP	1
	SS-316 Screen Cartridge Single Mesh 120 - Blue	12490171		
	SS-316 Screen Cartridge Single Mesh 150 - Red	12490184		
7	Cartridge O-Ring	50010040	NBR	2
8	Barrel	12490008	Glass reinforced PP	1
9	Adopter	12490019	Glass reinforced PP	1
10	Adopter O-Ring	50010087	NBR	1
11	¾"x¾" FXM Ball Valve	19070001	PP	1
12	¾" Vacuum Breaker	25100051	Glass reinforced PP	1
13	Hybrid Clamp (SS Long Handle)	14050038	Glass reinforced PA	1

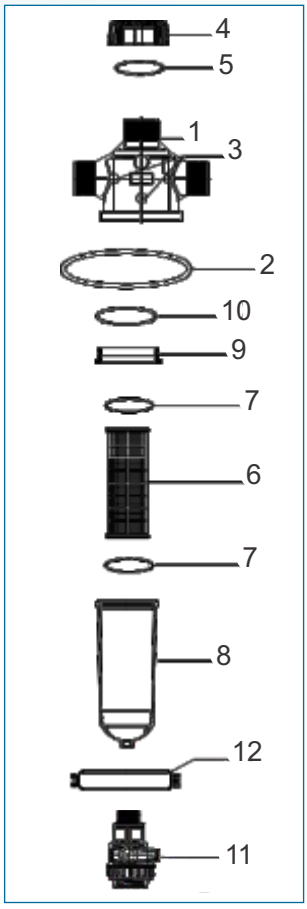

2 ½" Screen Filter (Model 125 T - 30 m³/hr)				
AIPL CODE	DESCRIPTION	INLET/OUTLET	CONNECTION SIZE	MICRON /MESH
14330003	2 ½" Screen Filter T-Type (With SS Clamp) 120 Mesh	Male Thread NPT	2 ½"	130/120
14100003	2 ½" Screen Filter T-Type (With SS Clamp) 120 Mesh	Male Thread BSP	2 ½"	130/120
SPARE PARTS				
S. NO	PARTS NAME	PART CODE	MATERIAL	QTY
1	Body (BSP Thread)	12490077	Glass reinforced PP	1
	Body (NPT Thread)	12490126		
2	Gasket	50030031	NBR	1
3	Brass Bush	50100033	Brass	3
4	End Cap (BSP Thread)	12490120	Glass reinforced PP	1
	End Cap (NPT Thread)	12490129		
5	End Cap O-Ring	50010041	NBR	1
6	SS-316 Screen Cartridge Double Mesh 30/80 - Black	12490031	Glass reinforced PP	1
	SS-316 Screen Cartridge Double Mesh 30/120 - Blue	12490029		
	SS-316 Screen Cartridge Double Mesh 30/150 - Red	12490032		
7	Cartridge O-Ring	50010040	NBR	2
8	Barrel	12490008	Glass reinforced PP	1
9	Adopter	12490019	Glass reinforced PP	1
10	Adopter O-Ring	50010087	NBR	1
11	¾"x¾" FXM Ball Valve	19070001	PP	1
12	SS Clamp (Long Handle)	14010060	SS 304	1

T Type Screen Filters

AQ-125TL(HC)

Max. Operating Pressure	6 Kg/cm²
Clamp Material	Nylon Reinforced
Vacuum Breaker	For upside up installation
Drain port location	Front of the filter Body
Flow passes through outside to inside screen filter mesh.	

AQ-125TL

Max. Operating Pressure	8 Kg/cm²
Clamp Material	Stainless Steel
Vacuum Breaker	Not fit with this design
Drain port location	Below the Filter barrel
Flow passes through inside to outside screen filter mesh.	

Specifications	AQ-125TL(HC)		AQ-125TL	
	US Standard	Metric Standard	US Standard	Metric Standard
Inlet / outlet	2½" NPT male thread	2½" BSP male thread	2½" NPT male thread	2½" BSP male thread
Max. Operating Pressure	85Psi	6 kg/cm²	110 Psi	8 kg/cm²
Range of Flow Rate	155 - 200 GPM	35 – 45 m³/h	155 - 200 GPM	35 – 45 m³/h
Nominal Flow Rate	175 GPM	40 m³/h	175 GPM	40 m³/h
Filtration Surface Area	116.8 in²	754 cm²	128.8 in²	831 cm²
Material of Construction	Rainforced Polypropylene		Rainforced Polypropylene	
Screen Material	Stainless Steel SS-316		Stainless Steel SS-316	
Cartridge Diameter	4.76 in	121 mm	4.76 in	121 mm
Cartridge Length	14.8 in	377 mm	15 in	382 mm
Available Mesh	80, 120, 150 mesh	80, 120, 150 mesh	80, 120, 150 mesh	80, 120, 150 mesh

Filtering Element

- 80 Mesh
- 120 Mesh
- 150 Mesh

Head Loss : AQ-125TL(HC)					
Flow m³/hr	28	35	40	45	54
Pressure Loss kg/cm²	0.08	0.15	0.21	0.25	0.36
Flow GPM	123.2	155.0	175.0	200.0	237.6
Pressure Loss PSI	1.14	2.24	2.88	3.65	5.12

Head Loss : AQ-125TL					
Flow m³/hr	28	35	40	45	54
Pressure Loss kg/cm²	0.09	0.20	0.27	0.35	0.46
Flow GPM	123.0	155.0	175.0	200.0	237.6
Pressure Loss PSI	1.28	2.89	3.93	5.11	6.53

T Type Screen Filters

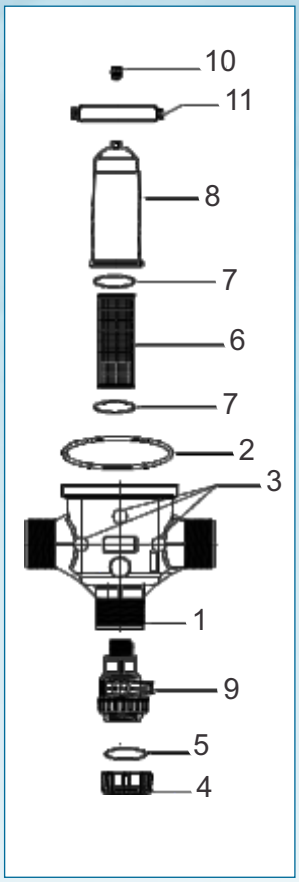

2 ½" Screen Filter (Model 125 TL(HC) - 40 m³/hr)				
AIPL CODE	DESCRIPTION	INLET/OUTLET	CONNECTION SIZE	MICRON /MESH
14320022	2½" Screen Filter T-Type (With Hybrid Clamp) 120 Mesh	Male Thread NPT	2½"	130/120
14050083	2½" Screen Filter T-Type (With Hybrid Clamp) 120 Mesh	Male Thread BSP	2½"	130/120
SPARE PARTS				
S. NO	PARTS NAME	PART CODE	MATERIAL	QTY
1	Body (BSP Thread)	12490077	Glass reinforced PP	1
	Body (NPT Thread)	12490126		
2	Gasket	50030031	NBR	1
3	Brass Bush	50100033	Brass	3
4	End Cap (BSP Thread)	12490120	Glass reinforced PP	1
	End Cap (NPT Thread)	12490129		
5	End Cap O-Ring	14120001	NBR	1
6	SS-316 Screen Cartridge Single Mesh 80 - Black	12490174	Glass reinforced PP	1
	SS-316 Screen Cartridge Single Mesh 120 - Blue	12490172		
	SS-316 Screen Cartridge Single Mesh 150 - Red	12490175		
7	Cartridge O-Ring	50010040	NBR	2
8	Barrel	12490116	Glass reinforced PP	1
9	¾"x¾" FXM Ball Valve	19070001	PP	1
10	¾" Vacuum Breaker	25100051	Glass reinforced PP	1
11	Hybrid Clamp (SS Long Handle)	14050038	Glass reinforced PA	1

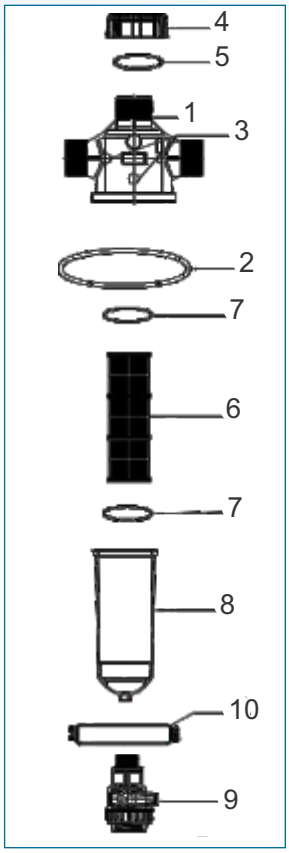

2 ½" Screen Filter (Model 125 TL - 40 m³/hr)				
AIPL CODE	DESCRIPTION	INLET/OUTLET	CONNECTION SIZE	MICRON /MESH
14330004	2½" Screen Filter T-Type (With SS Clamp) 120 Mesh	Male Thread NPT	2½"	130/120
14100004	2½" Screen Filter T-Type (With SS Clamp) 120 Mesh	Male Thread BSP	2½"	130/120
SPARE PARTS				
S. NO	PARTS NAME	PART CODE	MATERIAL	QTY
1	Body (BSP Thread)	12490077	Glass reinforced PP	1
	Body (NPT Thread)	12490127		
2	Gasket	50030031	NBR	1
3	Brass Bush	50100033	Brass	3
4	End Cap (BSP Thread)	12490120	Glass reinforced PP	1
	End Cap (NPT Thread)	12490129		
5	End Cap O-Ring	14120001	NBR	1
6	SS-316 Screen Cartridge Double Mesh 30/80 - Black	12490073	Glass reinforced PP	1
	SS-316 Screen Cartridge Double Mesh 30/120 - Blue	12490071		
	SS-316 Screen Cartridge Double Mesh 30/150 - Red	12490074		
7	Cartridge O-Ring	50010040	NBR	2
8	Barrel	12490116	Glass reinforced PP	1
9	¾"x¾" FXM Ball Valve	19070001	PP	1
10	SS Clamp (Long Handle)	14010060	SS 304	1

T Type Screen Filters

AQ-126T(HC)

Max. Operating Pressure	6 Kg/cm²
Clamp Material	Nylon Reinforced
Vacuum Breaker	For upside up installation
Drain port location	Front of the filter Body
Flow passes through outside to inside screen filter mesh.	

AQ-126T

Max. Operating Pressure	8 Kg/cm²
Clamp Material	Stainless Steel
Vacuum Breaker	Not fit with this design
Drain port location	Below the Filter barrel
Flow passes through inside to outside screen filter mesh.	

Specifications	AQ-126T(HC)		AQ-126T	
	US Standard	Metric Standard	US Standard	Metric Standard
Inlet / outlet	2″ NPT Female thread	3″ BSP male thread	2½″ NPT male thread	3″ BSP male thread
Max. Operating Pressure	85Psi	6 kg/cm²	110 Psi	8 kg/cm²
Range of Flow Rate	155 - 200 GPM	35 – 45 m³/h	155 - 200 GPM	35 – 45 m³/h
Nominal Flow Rate	175 GPM	40 m³/h	175 GPM	40 m³/h
Filtration Surface Area	116.8 in²	754 cm²	128.8 in²	831 cm²
Material of Construction	Rainforced Polypropylene		Rainforced Polypropylene	
Screen Material	Stainless Steel SS-316		Stainless Steel SS-316	
Cartridge Diameter	4.76 in	121 mm	4.76 in	121 mm
Cartridge Length	14.8 in	377 mm	15 in	382 mm
Available Mesh	80, 120, 150 mesh	80, 120, 150 mesh	80, 120, 150 mesh	80, 120, 150 mesh

Filtering Element

- 80 Mesh
- 120 Mesh
- 150 Mesh

Head Loss : AQ-126T(HC)					
Flow m³/hr	28	35	40	42	50.4
Pressure Loss kg/cm²	0.05	0.10	0.20	0.26	0.47
Flow GPM	123.2	155.0	175.0	200.0	222.0
Pressure Loss PSI	0.71	1.49	2.76	4.48	6.68

Head Loss : AQ-126T					
Flow m³/hr	28	35	40	42	50.4
Pressure Loss kg/cm²	0.05	0.11	0.25	0.34	0.52
Flow GPM	123.0	155.0	175.0	200.0	222.0
Pressure Loss PSI	0.71	1.63	3.43	5.43	7.43

T Type Screen Filters

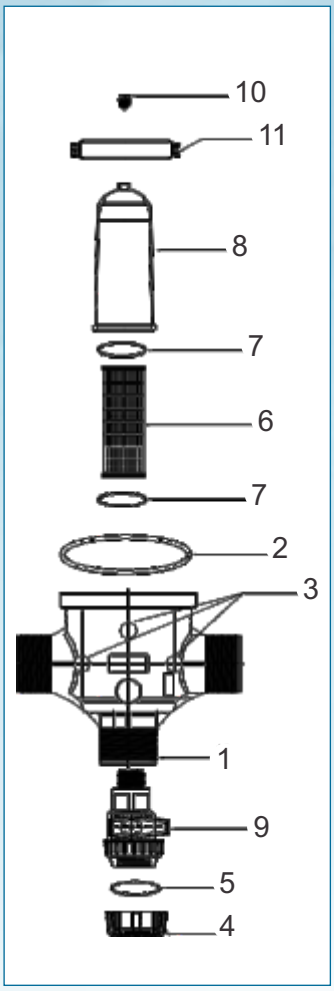

3" Screen Filter (Model 126 T(HC) - 40 m³/hr)				
AIPL CODE	DESCRIPTION	INLET/OUTLET	CONNECTION SIZE	MICRON /MESH
14320023	3" Screen Filter T-Type (With Hybrid Clamp) 120 Mesh	Male Thread NPT	3"	130/120
14050084	3" Screen Filter T-Type (With Hybrid Clamp) 120 Mesh	Male Thread BSP	3"	130/120
14460003	3" Screen Filter T-Type (With Hybrid Clamp) 120 Mesh	Victaulic Connection	3"	130/120
SPARE PARTS				
S. NO	PARTS NAME	PART CODE	MATERIAL	QTY
1	Plain Body (BSP Thread)	12490001	Glass reinforced PP	1
	Plain Body (NPT Thread)	12490185		
	Plain Body (Victaulic Connection)	12490006		
2	Gasket	50030031	NBR	1
3	Brass Bush	50100033	Brass	3
4	End Cap (BSP Thread)	12490009	Glass reinforced PP	1
	End Cap (NPT Thread)	12490010		
5	End Cap O-Ring	50010039	NBR	1
6	SS-316 Screen Cartridge Single Mesh 80 - Black	12490174	Glass reinforced PP	1
	SS-316 Screen Cartridge Single Mesh 120 - Blue	12490172		
	SS-316 Screen Cartridge Single Mesh 150 - Red	12490175		
7	Cartridge O-Ring	50010040	NBR	2
8	Barrel	12490116	Glass reinforced PP	1
9	¾"x¾" FXM Ball Valve	19070001	PP	1
10	¾" Vacuum Breaker	25100051	Glass reinforced PP	1
11	Hybrid Clamp (SS Long Handle)	14050038	Glass reinforced PA	1

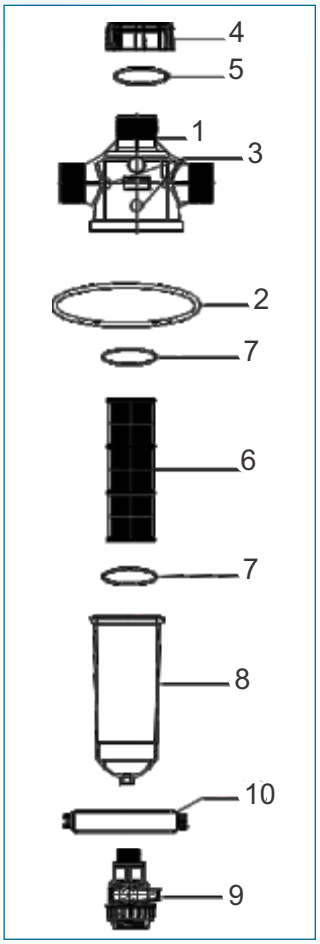

3" Screen Filter (Model 126 T - 40 m³/hr)				
AIPL CODE	DESCRIPTION	INLET/OUTLET	CONNECTION SIZE	MICRON /MESH
14310010	3" Screen Filter T-Type (With SS Clamp) 120 Mesh	Male Thread NPT	3"	130/120
14100005	3" Screen Filter T-Type (With SS Clamp) 120 Mesh	Male Thread BSP	3"	130/120
14450003	3" Screen Filter T-Type (With SS Clamp) 120 Mesh	Victaulic Connection	3"	130/120
SPARE PARTS				
S. NO	PARTS NAME	PART CODE	MATERIAL	QTY
1	Plain Body (BSP Thread)	12490001	Glass reinforced PP	1
	Plain Body (NPT Thread)	12490185		
	Plain Body (Victaulic Connection)	12490006		
2	Gasket	50030031	NBR	1
3	Brass Bush	50100033	Brass	3
4	End Cap (BSP Thread)	12490009	Glass reinforced PP	1
	End Cap (NPT Thread)	12490010		
5	End Cap O-Ring	50010039	NBR	1
6	SS-316 Screen Cartridge Double Mesh 30/80 - Black	12490073	Glass reinforced PP	1
	SS-316 Screen Cartridge Double Mesh 30/120 - Blue	12490071		
	SS-316 Screen Cartridge Double Mesh 30/150 - Red	12490074		
7	Cartridge O-Ring	50010040	NBR	2
8	Barrel	12490116	Glass reinforced PP	1
9	¾"x¾" FXM Ball Valve	19070001	PP	1
10	SS Clamp (Long Handle)	14010060	SS 304	1

T Type Screen Filters

AQ-126TL(HC)

Max. Operating Pressure	6 Kg/cm²
Clamp Material	Nylon Reinforced
Vacuum Breaker	For upside up installation
Drain port location	Front of the filter Body
Flow passes through outside to inside screen filter mesh.	

AQ-126TL

Max. Operating Pressure	8 Kg/cm²
Clamp Material	Stainless Steel
Vacuum Breaker	Not fit with this design
Drain port location	Below the Filter barrel
Flow passes through inside to outside screen filter mesh.	

Specifications	AQ-126TL(HC)		AQ-126TL	
	US Standard	Metric Standard	US Standard	Metric Standard
Inlet / outlet	2″ NPT Female thread	3″ BSP male thread	2″ NPT male thread	3″ BSP male thread
Max. Operating Pressure	85Psi	6 kg/cm²	110 Psi	8 kg/cm²
Range of Flow Rate	195 - 225 GPM	45 – 51 m³/h	195 - 225 GPM	45 – 51 m³/h
Nominal Flow Rate	220 GPM	50 m³/h	220 GPM	50 m³/h
Filtration Surface Area	1108	960 cm²	171.7in²	1108 cm²
Material of Construction	Rainforced Polypropylene		Rainforced Polypropylene	
Screen Material	Stainless Steel SS-316		Stainless Steel SS-316	
Cartridge Diameter	4.76 in	121 mm	4.76 in	121 mm
Cartridge Length	19.8in	502 mm	19.8in	502 mm
Available Mesh	80, 120, 150 mesh	80, 120, 150 mesh	80, 120, 150 mesh	80, 120, 150 mesh

Filtering Element

- 80 Mesh
- 120 Mesh
- 150 Mesh

Head Loss : AQ-126TL(HC)

Flow m³/hr	36	45	50	51	61.2
Pressure Loss kg/cm²	0.05	0.10	0.24	0.26	0.40
Flow GPM	160.0	195.0	220.0	225.0	5.7
Pressure Loss PSI	0.78	1.21	3.41	3.76	6.35

Head Loss : AQ-126TL

Flow m³/hr	36	45	50	51	61.2
Pressure Loss kg/cm²	0.05	0.13	0.3	0.32	0.45
Flow GPM	160.0	195.0	220.0	225.0	269.0
Pressure Loss PSI	0.78	1.68	4.26	4.56	6.35

T Type Screen Filters

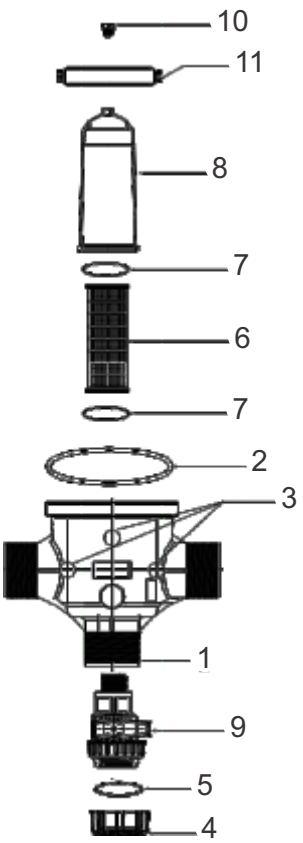

3" Screen Filter (Model 126 TL(HC) - 50 m³/hr)				
AIPL CODE	DESCRIPTION	INLET/OUTLET	CONNECTION SIZE	MICRON /MESH
14320024	3" Screen Filter T-Type (With Hybrid Clamp) 120 Mesh	Male Thread NPT	3"	130/120
14050085	3" Screen Filter T-Type (With Hybrid Clamp) 120 Mesh	Male Thread BSP	3"	130/120
14460004	3" Screen Filter T-Type (With Hybrid Clamp) 120 Mesh	Victaulic Connection	3"	130/120
SPARE PARTS				
S. NO	PARTS NAME	PART CODE	MATERIAL	QTY
1	Plain Body (BSP Thread)	12490001	Glass reinforced PP	1
	Plain Body (NPT Thread)	12490185		
	Plain Body (Victaulic Connection)	12490006		
2	Gasket	50030031	NBR	1
3	Brass Bush	50100033	Brass	3
4	End Cap (BSP Thread)	12490009	Glass reinforced PP	1
	End Cap (NPT Thread)	12490010		
5	End Cap O-Ring	50010039	NBR	1
6	SS-316 Screen Cartridge Single Mesh 80 - Black	12490180	Glass reinforced PA	1
	SS-316 Screen Cartridge Single Mesh 120 - Blue	12490178		
	SS-316 Screen Cartridge Single Mesh 150 - Red	12490177		
7	Cartridge O-Ring	50010040	NBR	2
8	Barrel	12490007	Glass reinforced PP	1
9	¾"x¾" FXM Ball Valve	19070001	PP	1
10	¾" Vacuum Breaker	25100051	Glass reinforced PP	1
11	Hybrid Clamp (SS Long Handle)	14050038	Glass reinforced PA	1

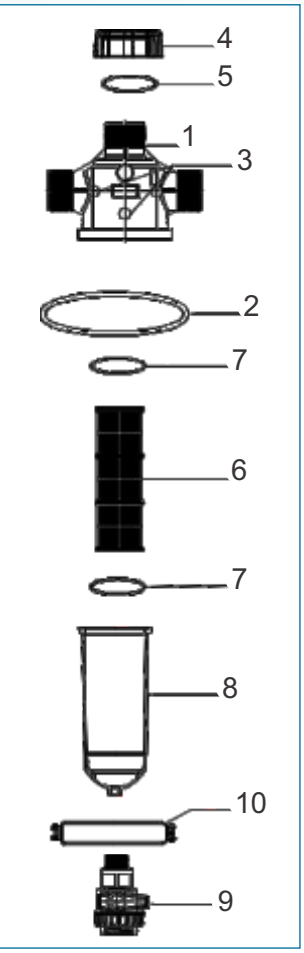

3" Screen Filter (Model 126 TL - 50 m³/hr)				
AIPL CODE	DESCRIPTION	INLET/OUTLET	CONNECTION SIZE	MICRON /MESH
14310011	3" Screen Filter T-Type (With SS Clamp) 120 Mesh	Male Thread NPT	3"	130/120
14100006	3" Screen Filter T-Type (With SS Clamp) 120 Mesh	Male Thread BSP	3"	130/120
14450004	3" Screen Filter T-Type (With SS Clamp) 120 Mesh	Victaulic Connection	3"	130/120
SPARE PARTS				
S. NO	PARTS NAME	PART CODE	MATERIAL	QTY
1	Plain Body (BSP Thread)	12490001	Glass reinforced PP	1
	Plain Body (NPT Thread)	12490185		
	Plain Body (Victaulic Connection)	12490006		
2	Gasket	50030031	NBR	1
3	Brass Bush	50100033	Brass	3
4	End Cap (BSP Thread)	12490009	Glass reinforced PP	1
	End Cap (NPT Thread)	12490010		
5	End Cap O-Ring	50010039	NBR	1
6	SS-316 Screen Cartridge Double Mesh 30/80 - Black	12490037	Glass reinforced PA	1
	SS-316 Screen Cartridge Double Mesh 30/120 - Blue	12490035		
	SS-316 Screen Cartridge Double Mesh 30/150 - Red	12490034		
7	Cartridge O-Ring	50010040	NBR	2
8	Barrel	12490007	Glass reinforced PP	1
9	¾"x¾" FXM Ball Valve	19070001	PP	1
10	SS Clamp (Long Handle)	14010060	SS 304	1

T Type Disc Filters

AQ-134TS(HC)

Max. Operating Pressure	6 Kg/cm^2
Clamp Material	Nylon Reinforced
Vacuum Breaker	For upside up installation
Drain port location	Front of the filter Body
Flow passes through outside to inside of Disc stake.	

AQ-134TS

Max. Operating Pressure	8 Kg/cm^2
Clamp Material	Stainless Steel
Vacuum Breaker	Not fit with this design
Drain port location	Below the Filter barrel
Flow passes through outside to inside of Disc stake.	

Specifications	AQ-134TS(HC) & AQ-134TS	
	US Standard	Metric Standard
Inlet / outlet	2" NPT	2" BSP
Range of Flow Rate	80-120 GPM	18-27 m^3/hr
Nominal Flow Rate	110 GPM	25 m^3/hr
Filtration Surface Area	136 in^2	878cm^2
Material of Construction	Reinforced Polypropylene	
Material Of Disc	Poly Propylene	
Cartridge Diameter	4.76 Inches	121mm
Cartridge Length	11.8Inches	300mm
Available Mesh	120, 150 mesh	120, 150 mesh

Filtering Element

120 Mesh

150 Mesh

Head Loss : AQ-134TS(HC) & AQ-134TS				
Flow m^3/hr	18	25	27	32.4
Pressure Loss kg/cm^2	0.14	0.26	0.3	0.41
Flow GPM	80	110	120	143
Pressure Loss PSI	2.11	3.69	4.38	5.89

T Type Disc Filters

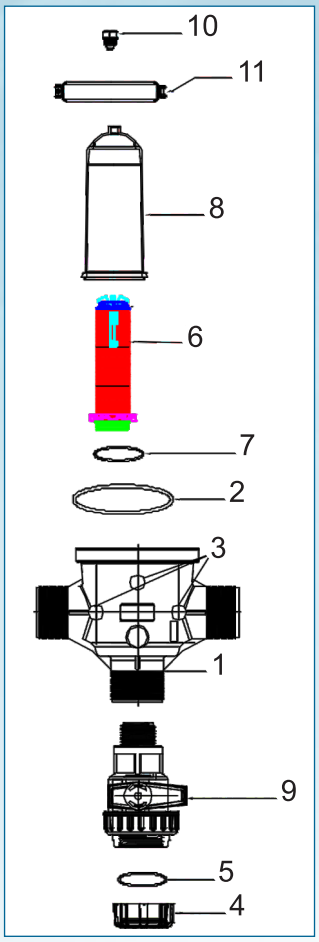

2" Disc Filter [Model 134TS(HC)- 25 m³/hr]				
AIPL CODE	DESCRIPTION	INLET/OUTLET	CONNECTION SIZE	MICRON /MESH
14350027	2" Disc Filter T-Type (With Hybrid Clamp) 120 Mesh	Male Thread NPT	2"	130/120
14070083	2" Disc Filter T-Type (With Hybrid Clamp) 120 Mesh	Male Thread BSP	2"	130/120
14430001	2" Disc Filter T-Type (With Hybrid Clamp) 120 Mesh	Victaulic Connection	2"	130/120
SPARE PARTS				
S. NO	PARTS NAME	PART CODE	MATERIAL	QTY
1	Plain Body (BSP Thread)	12490023	Glass reinforced PP	1
	Plain Body (NPT Thread)	12490101		
	Plain Body (Victaulic Connection)	12490104		
2	Gasket	50030031	NBR	1
3	Brass Bush	50100033	Brass	3
4	End Cap (BSP Thread)	12490027	Glass reinforced PP	1
	End Cap (NPT Thread)	12490028		
5	End Cap O-Ring	50010043	NBR	1
6	Disc Cartridge (120 Mesh)	14130001	Glass reinforced PP	1
	Disc Cartridge (150 Mesh)	14130007		
7	Cartridge O-Ring	50010087	NBR	1
8	Barrel	12490025	Glass reinforced PP	1
9	3/4"x3/4" FXM Ball Valve	19070001	PP	1
10	3/4" Vacuum Breaker	25100051	Glass reinforced PP	1
11	Hybrid Clamp (SS Long Handle)	14050038	Glass reinforced PA	1

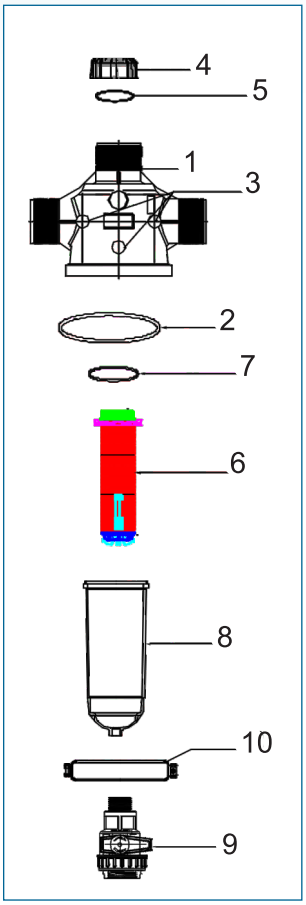

2" Disc Filter (Model 134 TS - 25 m³/hr)				
AIPL CODE	DESCRIPTION	INLET/OUTLET	CONNECTION SIZE	MICRON /MESH
14340001	2" Disc Filter T-Type (With SS Clamp) 120 Mesh	Male Thread NPT	2"	130/120
14010004	2" Disc Filter T-Type (With SS Clamp) 120 Mesh	Male Thread BSP	2"	130/120
14420001	2" Disc Filter T-Type (With SS Clamp) 120 Mesh	Victaulic Connection	2"	130/120
SPARE PARTS				
S. NO	PARTS NAME	PART CODE	MATERIAL	QTY
1	Plain Body (BSP Thread)	12490023	Glass reinforced PP	1
	Plain Body (NPT Thread)	12490101		
	Plain Body (Victaulic Connection)	12490104		
2	Gasket	50030031	NBR	1
3	Brass Bush	50100033	Brass	3
4	End Cap (BSP Thread)	12490027	Glass reinforced PP	1
	End Cap (NPT Thread)	12490028		
5	End Cap O-Ring	50010043	NBR	1
6	Disc Cartridge (120 Mesh)	14130001	Glass reinforced PP	
	Disc Cartridge (150 Mesh)	14130007		
7	Cartridge O-Ring	50010087	NBR	1
8	Barrel	12490025	Glass reinforced PP	1
9	3/4"x3/4" FXM Ball Valve	19070001	PP	1
10	SS Clamp (Long Handle)	14010060	SS 304	1

T Type Disc Filters

AQ-134T(HC)

Max. Operating Pressure	6 Kg/cm^2
Clamp Material	Nylon Reinforced
Vacuum Breaker	For upside up installation
Drain port location	Front of the filter Body
Flow passes through outside to inside of Disc stake.	

AQ-134T

Max. Operating Pressure	8 Kg/cm^2
Clamp Material	Stainless Steel
Vacuum Breaker	Not fit with this design
Drain port location	Below the Filter barrel
Flow passes through outside to inside of Disc stake.	

Specifications	AQ-134T(HC) & AQ-134T	
	US Standard	Metric Standard
Inlet / outlet	2″ NPT	2″ BSP
Range of Flow Rate	95-155 GPM	22-35 m^3/hr
Nominal Flow Rate	130 GPM	30 m^3/hr
Filtration Surface Area	185 in^2	1193cm^2
Material of Construction	Reinforced Polypropylene	
Material of Disc	Polypropylene Disc	
Cartridge Diameter	4.76 Inches	121mm
Cartridge Length	15.75 Inches	400mm
Available Mesh	120, 150 mesh	120, 150 mesh

Filtering Element

120 Mesh

150 Mesh

Head Loss : AQ-134T(HC) & AQ-134T					
Flow m^3/hr	17.6	22	26.4	30	35
Pressure Loss kg/cm^2	0.11	0.18	0.26	0.32	0.44
Flow GPM	78	95	116	130	154
Pressure Loss PSI	1.64	2.32	3.63	4.35	6.25

T Type Disc Filters

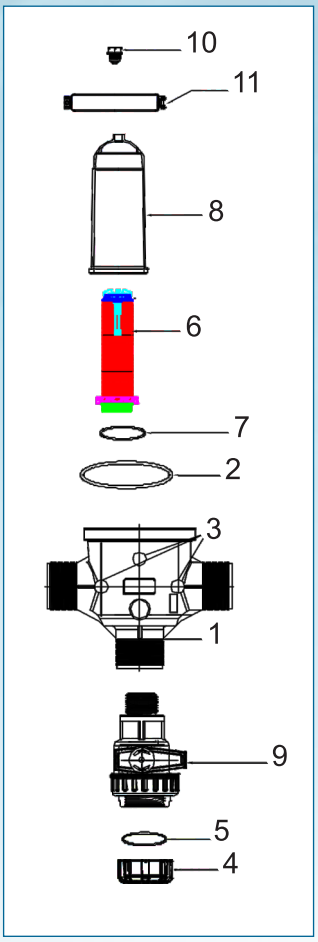

2" Disc Filter [Model 134 T(HC) - 30 m³/hr]				
AIPL CODE	DESCRIPTION	INLET/OUTLET	CONNECTION SIZE	MICRON /MESH
14350029	2" Disc Filter T-Type (With Hybrid Clamp) 120 Mesh	Male Thread NPT	2"	130/120
14070085	2" Disc Filter T-Type (With Hybrid Clamp) 120 Mesh	Male Thread BSP	2"	130/120
14430002	2" Disc Filter T-Type (With Hybrid Clamp) 120 Mesh	Victaulic Connection	2"	130/120
SPARE PARTS				
S. NO	PARTS NAME	PART CODE	MATERIAL	QTY
1	Plain Body (BSP Thread)	12490023	Glass reinforced PP	1
	Plain Body (NPT Thread)	12490101		
	Plain Body (Victaulic Connection)	12490104		
2	Gasket	50030031	NBR	1
3	Brass Bush	50100033	Brass	3
4	End Cap (BSP Thread)	12490027	Glass reinforced PP	1
	End Cap (NPT Thread)	12490028		
5	End Cap O-Ring	50010043	NBR	1
6	Disc Cartridge (120 Mesh)	14130004	Glass reinforced PP	1
	Disc Cartridge (150 Mesh)	14130010		
7	Cartridge O-Ring	50010087	NBR	1
8	Barrel	12490116	Glass reinforced PP	1
9	3/4"x3/4" FXM Ball Valve	19070001	PP	1
10	3/4" Vacuum Breaker	25100051	Glass reinforced PP	1
11	Hybrid Clamp (SS Long Handle)	14050038	Glass reinforced PA	1

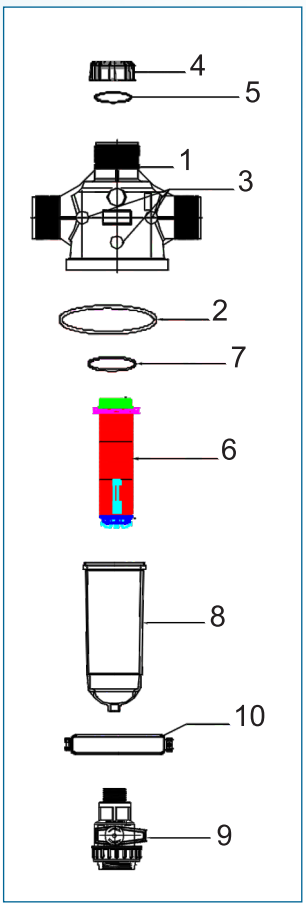

2" Disc Filter (Model 134 T - 30 m³/hr)				
AIPL CODE	DESCRIPTION	INLET/OUTLET	CONNECTION SIZE	MICRON /MESH
14340002	2" Disc Filter T-Type (With SS Clamp) 120 Mesh	Male Thread NPT	2"	130/120
14010001	2" Disc Filter T-Type (With SS Clamp) 120 Mesh	Male Thread BSP	2"	130/120
14420002	2" Disc Filter T-Type (With SS Clamp) 120 Mesh	Victaulic Connection	2"	130/120
SPARE PARTS				
S. NO	PARTS NAME	PART CODE	MATERIAL	QTY
1	Plain Body (BSP Thread)	12490023	Glass reinforced PP	1
	Plain Body (NPT Thread)	12490101		
	Plain Body (Victaulic Connection)	12490104		
2	Gasket	50030031	NBR	1
3	Brass Bush	50100033	Brass	3
4	End Cap (BSP Thread)	12490027	Glass reinforced PP	1
	End Cap (NPT Thread)	12490028		
5	End Cap O-Ring	50010043	NBR	1
6	Disc Cartridge (120 Mesh)	14130004	Glass reinforced PP	
	Disc Cartridge (150 Mesh)	14130010		
7	Cartridge O-Ring	50010087	NBR	1
8	Barrel	12490116	Glass reinforced PP	1
9	3/4"x3/4" FXM Ball Valve	19070001	PP	1
10	SS Clamp (Long Handle)	14010060	SS 304	1

T Type Disc Filters

AQ-135T(HC)

Max. Operating Pressure	6 Kg/cm^2
Clamp Material	Nylon Reinforced
Vacuum Breaker	For upside up installation
Drain port location	Front of the filter Body
Flow passes through outside to inside of Disc stake.	

AQ-135T

Max. Operating Pressure	8 Kg/cm^2
Clamp Material	Stainless Steel
Vacuum Breaker	Not fit with this design
Drain port location	Below the Filter barrel
Flow passes through outside to inside of Disc stake.	

Specifications	AQ-135T(HC) & AQ-135T	
	US Standard	Metric Standard
Inlet / outlet	2$^1/_2$" NPT	2$^1/_2$" BSP
Range of Flow Rate	110-155 GPM	25-35 m^3/hr
Nominal Flow Rate	130 GPM	30 m^3/hr
Filtration Surface Area	136 in^2	878cm^2
Material of Construction	Reinforced Polypropylene	
Material of Disc	Polypropylene Disc	
Cartridge Diameter	4.76 Inches	121mm
Cartridge Length	11.8 Inches	300mm
Available Mesh	120, 150 mesh	120, 150 mesh

Filtering Element

120 Mesh

150 Mesh

Head Loss : AQ-135T(HC) & AQ-135T				
Flow m^3/hr	20	25	30	35
Pressure Loss kg/cm^2	0.12	0.16	0.24	0.32
Flow GPM	88	110	130	155
Pressure Loss PSI	1.70	2.27	3.27	4.64

T Type Disc Filters

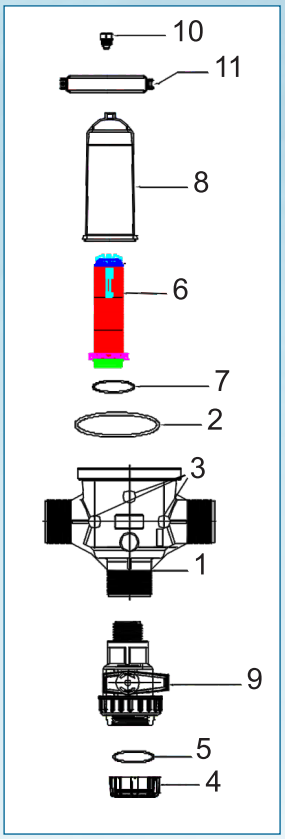

2 ½" Disc Filter [Model 135 T(HC) - 30 m³/hr]				
AIPL CODE	DESCRIPTION	INLET/OUTLET	CONNECTION SIZE	MICRON /MESH
14350028	2 ½" Disc Filter T-Type (With Hybrid Clamp) 120 Mesh	Male Thread NPT	2 ½"	130/120
14070084	2 ½" Disc Filter T-Type (With Hybrid Clamp) 120 Mesh	Male Thread BSP	2 ½"	130/120
SPARE PARTS				
S. NO	PARTS NAME	PART CODE	MATERIAL	QTY
1	Plain Body (BSP Thread)	12490077	Glass reinforced PP	1
	Plain Body (NPT Thread)	12490126		
2	Gasket	50030031	NBR	1
3	Brass Bush	50100033	Brass	3
4	End Cap (BSP Thread)	12490120	Glass reinforced PP	1
	End Cap (NPT Thread)	12490129		
5	End Cap O-Ring	14120001	NBR	1
6	Disc Cartridge (120 Mesh)	14130004	Glass reinforced PP	1
	Disc Cartridge (150 Mesh)	14130010		
7	Cartridge O-Ring	50010087	NBR	1
8	Barrel	12490116	Glass reinforced PP	1
9	3/4"x3/4" FXM Ball Valve	19070001	PP	1
10	3/4" Vacuum Breaker	25100051	Glass reinforced PP	1
11	Hybrid Clamp (SS Long Handle)	14050038	Glass reinforced PA	1

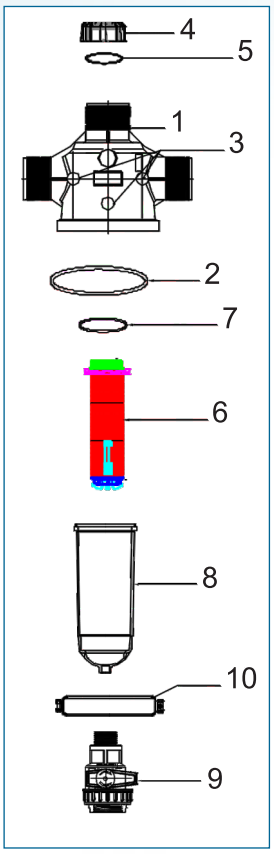

2 ½" Disc Filter (Model 135 T - 30 m³/hr)				
AIPL CODE	DESCRIPTION	INLET/OUTLET	CONNECTION SIZE	MICRON /MESH
14340003	2 ½" Disc Filter T-Type (With SS Clamp) 120MESH	Male Thread NPT	2 ½"	130/120
14010005	2 ½" Disc Filter T-Type (With SS Clamp) 120MESH	Male Thread BSP	2 ½"	130/120
SPARE PARTS				
S. NO	PARTS NAME	PART CODE	MATERIAL	QTY
1	Plain Body (BSP Thread)	12490077	Glass reinforced PP	1
	Plain Body (NPT Thread)	12490126		
2	Gasket	50030031	NBR	1
3	Brass Bush	50100033	Brass	3
4	End Cap (BSP Thread)	12490120	Glass reinforced PP	1
	End Cap (NPT Thread)	12490129		
5	End Cap O-Ring	14120001	NBR	1
6	Disc Cartridge (120 Mesh)	14130004	Glass reinforced PP	1
	Disc Cartridge (150 Mesh)	14130010		
7	Cartridge O-Ring	50010087	NBR	1
8	Barrel	12490116	Glass reinforced PP	1
9	3/4"x3/4" FXM Ball Valve	19070001	PP	1
10	SS Clamp (Long Handle)	14010060	SS 304	1

T Type Disc Filters

AQ-135TL(HC)

Max. Operating Pressure	6 Kg/cm^2
Clamp Material	Nylon Reinforced
Vacuum Breaker	For upside up installation
Drain port location	Front of the filter Body
Flow passes through outside to inside of Disc stake.	

AQ-135TL

Max. Operating Pressure	8 Kg/cm^2
Clamp Material	Stainless Steel
Vacuum Breaker	Not fit with this design
Drain port location	Below the Filter barrel
Flow passes through outside to inside of Disc stake.	

Specifications	AQ-135TL(HC) & AQ-135TL	
	US Standard	Metric Standard
Inlet / outlet	2$^1/_2$" NPT	2$^1/_2$" BSP
Range of Flow Rate	155-200 GPM	35-45 m^3/hr
Nominal Flow Rate	176 GPM	40 m^3/hr
Filtration Surface Area	185 in^2	1193cm^2
Material of Construction	Reinforced Polypropylene	
Material of Disc	Polypropylene Disc	
Cartridge Diameter	4.76 Inches	121mm
Cartridge Length	15.75 Inches	400mm
Available Mesh	120, 150 mesh	120, 150 mesh

Filtering Element

120 Mesh

150 Mesh

Head Loss : AQ-135TL(HC) & AQ-135TL				
Flow m^3/hr	28	35	40	45
Pressure Loss kg/cm^2	0.10	0.22	0.29	0.37
Flow GPM	123	155	175	200
Pressure Loss PSI	1.37	3.06	4.03	5.43

T Type Disc Filters

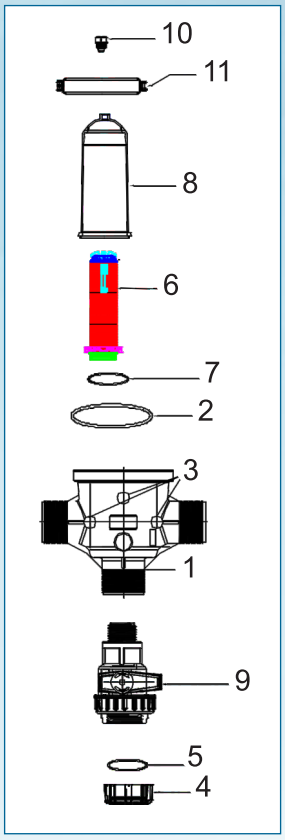

2 ½" Disc Filter [Model 135 TL(HC) - 40 m³/hr]				
AIPL CODE	DESCRIPTION	INLET/OUTLET	CONNECTION SIZE	MICRON /MESH
14350030	2 ½" Disc Filter T-Type (With Hybrid Clamp) 120 Mesh	Male Thread NPT	2 ½"	130/120
14070086	2 ½" Disc Filter T-Type (With Hybrid Clamp) 120 Mesh	Male Thread BSP	2 ½"	130/120
SPARE PARTS				
S. NO	PARTS NAME	PART CODE	MATERIAL	QTY
1	Plain Body (BSP Thread)	12490077	Glass reinforced PP	1
	Plain Body (NPT Thread)	12490126		
2	Gasket	50030031	NBR	1
3	Brass Bush	50100033	Brass	3
4	End Cap (BSP Thread)	12490120	Glass reinforced PP	1
	End Cap (NPT Thread)	12490129		
5	End Cap O-Ring	14120001	NBR	1
6	Disc Cartridge (120 Mesh)	14010047	Glass reinforced PP	1
	Disc Cartridge (150 Mesh)	14010049		
7	Cartridge O-Ring	50010087	NBR	1
8	Barrel	12490007	Glass reinforced PP	1
9	3/4"x3/4" FXM Ball Valve	19070001	PP	1
10	3/4" Vacuum Breaker	25100051	Glass reinforced PP	1
11	Hybrid Clamp (SS Long Handle)	14050038	Glass reinforced PA	1

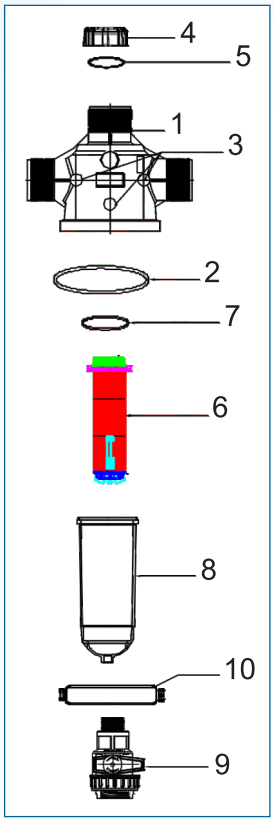

2 ½" Disc Filter [Model 135 TL - 40 m³/hr]				
AIPL CODE	DESCRIPTION	INLET/OUTLET	CONNECTION SIZE	MICRON /MESH
14340004	2 ½" Disc Filter T-Type (With SS Clamp) 120 Mesh	Male Thread NPT	2 ½"	130/120
14010006	2 ½" Disc Filter T-Type (With SS Clamp) 120 Mesh	Male Thread BSP	2 ½"	130/120
SPARE PARTS				
S. NO	PARTS NAME	PART CODE	MATERIAL	QTY
1	Plain Body (BSP Thread)	12490077	Glass reinforced PP	1
	Plain Body (NPT Thread)	12490126		
2	Gasket	50030031	NBR	1
3	Brass Bush	50100033	Brass	3
4	End Cap (BSP Thread)	12490120	Glass reinforced PP	1
	End Cap (NPT Thread)	12490129		
5	End Cap O-Ring	14120001	NBR	1
6	Disc Cartridge (120 Mesh)	14010047	Glass reinforced PP	1
	Disc Cartridge (150 Mesh)	14010049		
7	Cartridge O-Ring	50010087	NBR	1
8	Barrel	12490007	Glass reinforced PP	1
9	3/4"x3/4" FXM Ball Valve	19070001	PP	1
10	SS Clamp (Long Handle)	14010060	SS 304	1

T Type Disc Filters

AQ-136TS(HC)

Max. Operating Pressure	6 Kg/cm^2
Clamp Material	Nylon Reinforced
Vacuum Breaker	For upside up installation
Drain port location	Front of the filter Body
Flow passes through outside to inside of Disc stake.	

AQ-136TS

Max. Operating Pressure	8 Kg/cm^2
Clamp Material	Stainless Steel
Vacuum Breaker	Not fit with this design
Drain port location	Below the Filter barrel
Flow passes through outside to inside of Disc stake.	

Specifications	AQ-136TS(HC) & AQ-136TS	
	US Standard	Metric Standard
Inlet / outlet	3″ NPT	3″ BSP
Range of Flow Rate	155-200 GPM	35-45 m^3/hr
Nominal Flow Rate	175 GPM	40 m^3/hr
Filtration Surface Area	185 in^2	1193cm^2
Material of Construction	Reinforced Polypropylene	
Material of Disc	Polypropylene Disc	
Cartridge Diameter	4.76 Inches	14mm
Cartridge Length	15.75 Inches	400mm
Available Mesh	120, 150 mesh	120, 150 mesh

Filtering Element

120 Mesh

150 Mesh

Head Loss : AQ-136TS(HC) & AQ-136TS				
Flow m^3/hr	28	35	40	45
Pressure Loss kg/cm^2	0.13	0.21	0.28	0.365
Flow GPM	123	155	175	200
Pressure Loss PSI	1.82	3.06	3.87	5.32

T Type Disc Filters

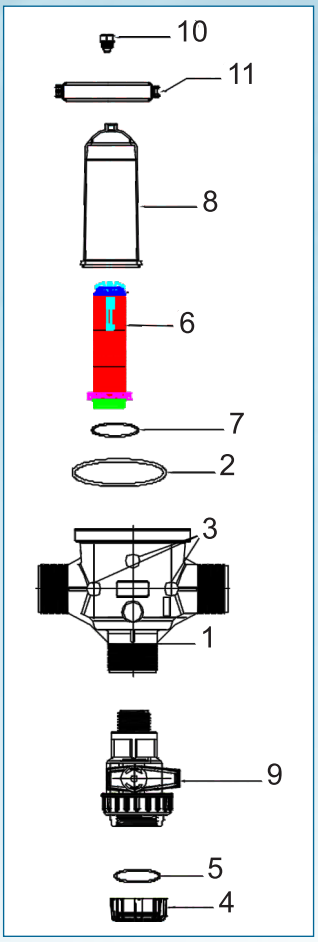

3" Disc Filter [Model 136 TS (HC) - 40 m³/hr]				
AIPL CODE	DESCRIPTION	INLET/OUTLET	CONNECTION SIZE	MICRON /MESH
14350031	3" Disc Filter T-Type (With Hybrid Clamp) 120 Mesh	Male Thread NPT	3"	130/120
14070087	3" Disc Filter T-Type (With Hybrid Clamp) 120 Mesh	Male Thread BSP	3"	130/120
14430003	3" Disc Filter T-Type (With Hybrid Clamp) 120 Mesh	Victaulic Connection	3"	130/120
SPARE PARTS				
S. NO	PARTS NAME	PART CODE	MATERIAL	QTY
1	Plain Body (BSP Thread)	12490001	Glass reinforced PP	1
	Plain Body (NPT Thread)	12490185		
	Plain Body (Victaulic Connection)	12490006		
2	Gasket	50030031	NBR	1
3	Brass Bush	50100033	Brass	3
4	End Cap (BSP Thread)	12490009	Glass reinforced PP	1
	End Cap (NPT Thread)	12490010		
5	End Cap O-Ring	50010039	NBR	1
6	Disc Cartridge (120 Mesh)	14130004	Glass reinforced PP	1
	Disc Cartridge (150 Mesh)	14130010		
7	Cartridge O-Ring	50010087	NBR	1
8	Barrel	12490116	Glass reinforced PP	1
9	3/4"x3/4" FXM Ball Valve	19070001	PP	1
10	3/4" Vacuum Breaker	25100051	Glass reinforced PP	1
11	Hybrid Clamp (SS Long Handle)	14050038	Glass reinforced PA	1

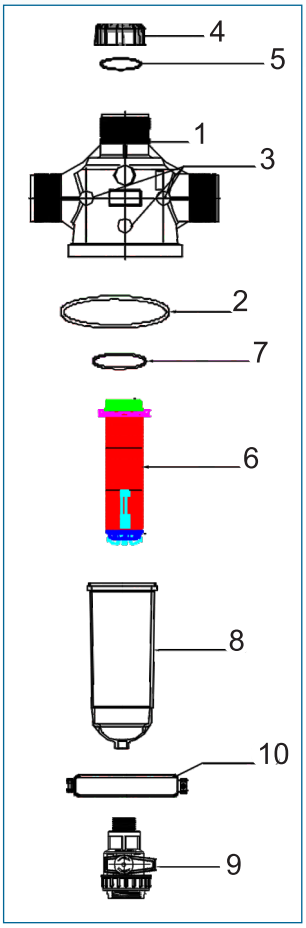

3" Disc Filter (Model 136 TS - 40 m³/hr)				
AIPL CODE	DESCRIPTION	INLET/OUTLET	CONNECTION SIZE	MICRON /MESH
14340005	3" Disc Filter T-Type (With SS Clamp) 120 Mesh	Male Thread NPT	3"	130/120
14010008	3" Disc Filter T-Type (With SS Clamp) 120 Mesh	Male Thread BSP	3"	130/120
14420003	3" Disc Filter T-Type (With SS Clamp) 120 Mesh	Victaulic Connection	3"	130/120
SPARE PARTS				
S. NO	PARTS NAME	PART CODE	MATERIAL	QTY
1	Plain Body (BSP Thread)	12490001	Glass reinforced PP	1
	Plain Body (NPT Thread)	12490185		
	Plain Body (Victaulic Connection)	12490006		
2	Gasket	50030031	NBR	1
3	Brass Bush	50100033	Brass	3
4	End Cap (BSP Thread)	12490009	Glass reinforced PP	1
	End Cap (NPT Thread)	12490010		
5	End Cap O-Ring	50010039	NBR	1
6	Disc Cartridge (120 Mesh)	14130004	Glass reinforced PP	
	Disc Cartridge (150 Mesh)	14130010		
7	Cartridge O-Ring	50010087	NBR	1
8	Barrel	12490116	Glass reinforced PP	1
9	3/4"x3/4" FXM Ball Valve	19070001	PP	1
10	SS Clamp (Long Handle)	14010060	SS 304	1

T Type Disc Filters

AQ-136T(HC)

Max. Operating Pressure	6 Kg/cm^2
Clamp Material	Nylon Reinforced
Vacuum Breaker	For upside up installation
Drain port location	Front of the filter Body
Flow passes through outside to inside of Disc stake.	

AQ-136T

Max. Operating Pressure	8 Kg/cm^2
Clamp Material	Stainless Steel
Vacuum Breaker	Not fit with this design
Drain port location	Below the Filter barrel
Flow passes through outside to inside of Disc stake.	

Specifications	AQ-136T(HC) & AQ-136T	
	US Standard	Metric Standard
Inlet / outlet	3″ NPT	3″ BSP
Range of Flow Rate	200-230 GPM	45-52 m^3/hr
Nominal Flow Rate	220 GPM	50 m^3/hr
Filtration Surface Area	262 in^2	1690cm^2
Material of Construction	Reinforced Polypropylene	
Material of Disc	Polypropylene Disc	
Cartridge Diameter	4.76 Inches	121mm
Cartridge Length	20.7 Inches	525mm
Available Mesh	120, 150 mesh	120, 150 mesh

Filtering Element

120 Mesh

150 Mesh

Head Loss : AQ-136T(HC) & AQ-136T				
Flow m^3/hr	36	45	50	52
Pressure Loss kg/cm^2	0.15	0.24	0.3	0.33
Flow GPM	158	200	220	230
Pressure Loss PSI	2.05	3.62	4.26	4.82

T Type Disc Filters

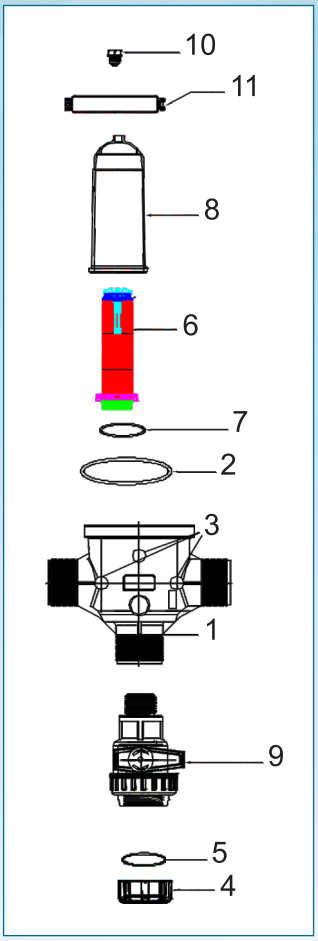

3" Disc Filter [Model 136 T (HC) - 50 m³/hr]				
AIPL CODE	DESCRIPTION	INLET/OUTLET	CONNECTION SIZE	MICRON /MESH
14350032	3" Disc Filter T-Type (With Hybrid Clamp) 120 Mesh	Male Thread NPT	3"	130/120
14070088	3" Disc Filter T-Type (With Hybrid Clamp) 120 Mesh	Male Thread BSP	3"	130/120
14430004	3" Disc Filter T-Type (With Hybrid Clamp) 120 Mesh	Victaulic Connection	3"	130/120
SPARE PARTS				
S. NO	PARTS NAME	PART CODE	MATERIAL	QTY
1	Plain Body (BSP Thread)	12490001	Glass reinforced PP	1
	Plain Body (NPT Thread)	12490185		
	Plain Body (Victaulic Connection)	12490006		
2	Gasket	50030031	NBR	1
3	Brass Bush	50100033	Brass	3
4	End Cap (BSP Thread)	12490009	Glass reinforced PP	1
	End Cap (NPT Thread)	12490010		
5	End Cap O-Ring	50010039	NBR	1
6	Disc Cartridge (120 Mesh)	14010047	Glass reinforced PP	1
	Disc Cartridge (150 Mesh)	14010049		
7	Cartridge O-Ring	50010087	NBR	1
8	Barrel	12490007	Glass reinforced PP	1
9	3/4"x3/4" FXM Ball Valve	19070001	PP	1
10	3/4" Vacuum Breaker	25100051	Glass reinforced PP	1
11	Hybrid Clamp (SS Long Handle)	14050038	Glass reinforced PA	1

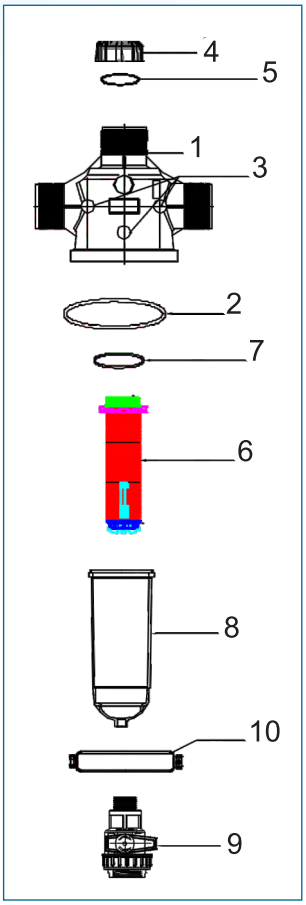

3" Disc Filter (Model 136 T - 50 m³/hr)				
AIPL CODE	DESCRIPTION	INLET/OUTLET	CONNECTION SIZE	MICRON /MESH
14340006	3" Disc Filter T-Type (With SS Clamp) 120 Mesh	Male Thread NPT	3"	130/120
14010007	3" Disc Filter T-Type (With SS Clamp) 120 Mesh	Male Thread BSP	3"	130/120
14420004	3" Disc Filter T-Type (With SS Clamp) 120 Mesh	Victaulic Connection	3"	130/120
SPARE PARTS				
S. NO	PARTS NAME	PART CODE	MATERIAL	QTY
1	Plain Body (BSP Thread)	12490001	Glass reinforced PP	1
	Plain Body (NPT Thread)	12490185		
	Plain Body (Victaulic Connection)	12490006		
2	Gasket	50030031	NBR	1
3	Brass Bush	50100033	Brass	3
4	End Cap (BSP Thread)	12490009	Glass reinforced PP	1
	End Cap (NPT Thread)	12490010		
5	End Cap O-Ring	50010039	NBR	1
6	Disc Cartridge (120 Mesh)	14010047	Glass reinforced PP	
	Disc Cartridge (150 Mesh)	14010049		
7	Cartridge O-Ring	50010087	NBR	1
8	Barrel	12490007	Glass reinforced PP	1
9	3/4"x3/4" FXM Ball Valve	19070001	PP	1
10	SS Clamp (Long Handle)	14010060	SS 304	1

Double Body Screen Filters

3"

Specifications	AQ - 126D	
	US Standard	Metric Standard
Inlet/outlet connection	3" NPT male thread	3" BSP male thread
Max. Operating Pressure	110 Psi	8 kg/cm²
Range of Flow Rate	195 - 265 GPM	45 - 60 m³/h
Nominal Flow Rate	220 GPM	50 m³/h
Filtration Surface area	171.7 in²	1108 cm²
Material of Construction	Reinforced PP + Nylon	
Screen Material	Stainless Steel SS-316	Stainless Steel SS-316
Cartridge Diameter	4.76 in	121mm
Cartridge Length	10 in X 2	254mm X 2
Available Mesh	80,120, 150 mesh	80,120, 150 mesh

Head Loss : AQ-126D									
Flow, m³/h	36	40	45	50	55	60	65	70	72
Pressure Loss, kg/cm²	0.09	0.11	0.14	0.19	0.23	0.27	0.30	0.34	0.36
Flow, GPM	158.4	176	198	220	242	264	286	308	316.8
Pressure Loss, Psi	1.28	1.56	1.99	2.70	3.27	3.83	4.26	4.83	5.11

Filtering Element 80 Mesh 120 Mesh 150 Mesh

Double Body Screen Filters

3"

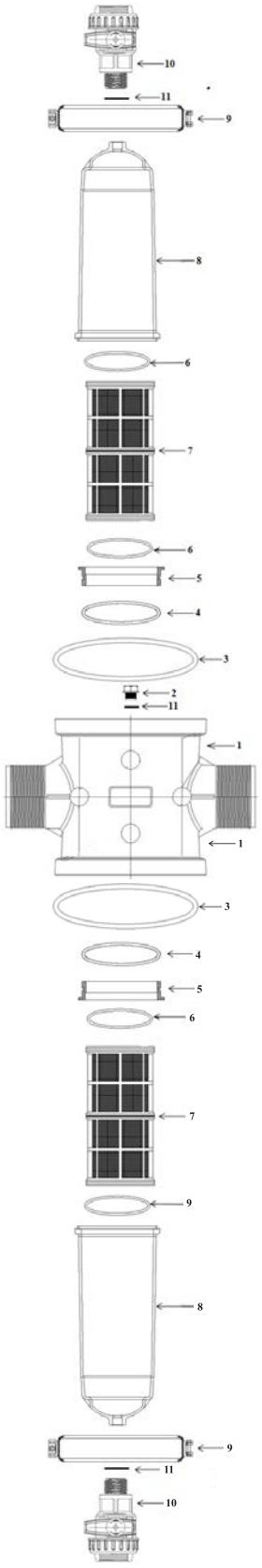

3" Double Screen Filter (Model 126 D - 50 m³/hr)				
AIPL CODE	DESCRIPTION	INLET/OUTLET	CONNECTION SIZE	MICRON /MESH
14330033	3" Double Screen Filter - 120 Mesh	Male Threaded NPT	3"	130/120
14100053	3" Double Screen Filter - 120 Mesh	Male Threaded BSP	3"	130/120
14450005	3" Double Screen Filter - 120 Mesh	Victaulic Connection	3"	130/120

SPARE PARTS				
S. NO	PARTS NAME	PART CODE	MATERIAL	QTY
1	3" Double filter body BSP	12490217	Glass Reinforced Nylon	1
	3" Double filter body NPT	12490216	Glass Reinforced Nylon	
	3" Double filter body VICTAULIC	12490245	Glass Reinforced Nylon	
2	3/4" Filter End Plug	12530100	Glass Reinforced Nylon	1
3	4" Filter Body Gasket	50030033	NBR	2
4	Apaptor O- ring - 4.80mm	50010055	NBR	2
5	TS Apaptor	12490026	Glass Reinforced PP	2
6	Cartridge O-ring -4.50 mm	50010042	NBR	4
7	Cartridge - 80 mesh	12490037	Glass Reinforced PP	2
	Cartridge - 120 mesh	12490035		
	Cartridge - 80 mesh	12490034		
8	Barrel small	12490190	Glass Reinforced PP	2
9	SS Clamp - 2.5 mm	50100030	SS-304	2
10	3/4" SU PP BV Threaded End MxF	19100063	PP	2
11	End Plug Washer	50020050	NBR	3

Double Body Screen Filters

4"

Specifications	AQ-128DS		AQ-128D	
	US Standard	Metric Standard	US Standard	Metric Standard
Inlet/outlet connection	4″ NPT male thread	4" BSP male thread	4″ NPT male thread	4" BSP male thread
Max. Operating Pressure	110 Psi	8 kg/cm²	110 Psi	8 kg/cm²
Range of Flow Rate	260 - 350 GPM	60 - 80 m³/h	350 - 440 GPM	80 - 100 m³/h
Nominal Flow Rate	310 GPM	70 m³/h	395 GPM	90 m³/h
Filtration Surface area	257.6 in	1662 cm²	343.5 in²	2216 cm²
Material of Construction	Reinforced PP + Nylon		Reinforced PP + Nylon	
Screen Material	Stainless Steel SS-316	Stainless Steel SS-316	Stainless Steel SS-316	Stainless Steel SS-316
Cartridge Diameter	4.76 in	121mm	4.76 in	121mm
Cartridge Length	15 in X 2	383mm X 2	19.82 in X 2	504mm X 2
Available Mesh	80,120, 150 mesh	80,120, 150 mesh	80,120,150 mesh	80,120, 150 mesh

Head Loss : AQ - 128DS

Flow, m³/h	45	48	50	55	60	65	70	75	80	85	90	96	100
Pressure Loss, kg/cm²	0.04	0.05	0.06	0.09	0.11	0.13	0.15	0.17	0.19	0.21	0.23	0.26	0.29
Flow, GPM	198	211.2	220	242	264	286	308	330	352	374	396	422.4	440
Pressure Loss, Psi	0.57	0.71	0.85	1.28	1.56	1.85	2.13	2.41	2.70	2.98	3.27	3.69	4.12

Head Loss : AQ - 128D

Flow, m³/h	60	64	70	75	80	85	90	95	100	105	110	115	120
Pressure Loss, kg/cm²	0.07	0.09	0.12	0.14	0.17	0.20	0.22	0.24	0.27	0.30	0.33	0.36	0.38
Flow, GPM	264	281.6	308	330	352	374	396	418	440	462	484	506	528
Pressure Loss, Psi	0.99	1.28	1.70	1.99	2.41	2.84	3.12	3.41	3.83	4.26	4.69	5.11	5.40

Filtering Element 80 Mesh 120 Mesh 150 Mesh

Double Body Screen Filters

4"

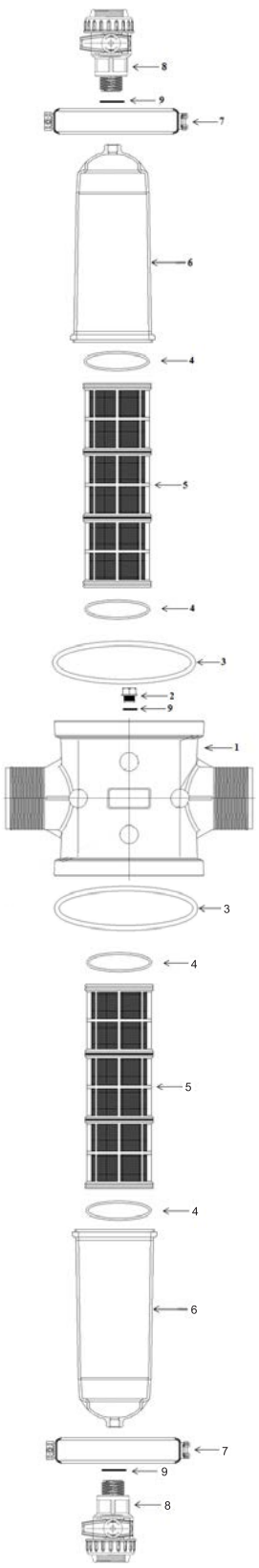

4" Double Screen Filter (Model 128 DS - 70 m³/hr)				
AIPL CODE	DESCRIPTION	INLET/OUTLET	CONNECTION SIZE	MICRON /MESH
14330034	4" Double Screen Filter - 120 Mesh	Male Threaded NPT	4"	130/120
14100052	4" Double Screen Filter - 120 Mesh	Male Threaded BSP	4"	130/120
14450006	4" Double Screen Filter - 120 Mesh	Victaulic Connection	4"	130/120

SPARE PARTS				
S. NO	PARTS NAME	PART CODE	MATERIAL	QTY
1	4" Double filter body BSP	12490218	Glass Reinforced Nylon	1
	4" Double filter body NPT	12490219	Glass Reinforced Nylon	
	4" Double filter body VICTAULIC	12490246	Glass Reinforced Nylon	
2	3/4" Filter End Plug	12530100	Glass Reinforced Nylon	1
3	4" Filter Body Gasket	50030033	NBR	2
4	Cartridge O-ring -4.50 mm	50010042	NBR	4
5	Cartridge - 80 mesh	12490073	Glass Reinforced PP	2
	Cartridge - 120 mesh	12490071		
	Cartridge - 150 mesh	12490074		
6	Barrel - Medium	12490116	Glass Reinforced PP	2
7	SS Clamp - 3.0mm	50100645	SS-304	2
8	3/4" SU PP BV Threaded End MxF	19100063	PP	2
9	3/4" Vacuum Breaker Rubber Washer	50020050	NBR	3

4" Double Screen Filter (Model 128 D - 90 m³/hr)				
AIPL CODE	DESCRIPTION	INLET/OUTLET	CONNECTION SIZE	MICRON /MESH
14330035	4" Double Screen Filter - 120 Mesh	Male Threaded NPT	4"	130/120
14100051	4" Double Screen Filter - 120 Mesh	Male Threaded BSP	4"	130/120
14450007	4" Double Screen Filter - 120 Mesh	Victaulic Connection	4"	130/120

SPARE PARTS				
S. NO	PARTS NAME	PART CODE	MATERIAL	QTY
1	4" Double filter body BSP	12490218	Glass Reinforced Nylon	1
	4" Double filter body NPT	12490219	Glass Reinforced Nylon	
	4" Double filter body VICTAULIC	12490246	Glass Reinforced Nylon	
2	3/4" Filter End Plug	12530100	Glass Reinforced Nylon	1
3	4" Filter Body Gasket	50030033	NBR	2
4	Cartridge O-ring	50010040	NBR	4
5	Cartridge - 80 mesh	12490037	Glass Reinforced Nylon	2
	Cartridge - 120 mesh	12490035		
	Cartridge - 150 mesh	12490034		
6	Barrel Long	12490007	Glass Reinforced PP	2
7	SS Clamp - 3.0mm	50100645	SS-304	2
8	¾" SU PP BV Threaded End MxF	19100063	PP	2
9	¾" Vacuum Breaker Rubber Washer	50020050	NBR	3

Double Body Disc Filters

3"

Specifications	AQ - 136D	
	US Standard	Metric Standard
Inlet/outlet connection	3" NPT male thread	3" BSP male thread
Max. Operating Pressure	110 Psi	8 kg/cm²
Range of Flow Rate	195 - 265 GPM	45 - 60 m³/h
Nominal Flow Rate	220 GPM	50 m³/h
Filtration Surface area	272.2 in²	1756 cm²
Material of Construction	Reinforced PP + Nylon	
Screen Material	Polypropylene disc	Polypropylene Disc
Cartridge Diameter	4.76 in	121mm
Cartridge Length	11.9 in X 2	300mm X 2
Available Mesh	120, 150 mesh	120, 150 mesh

Head Loss : AQ - 136D													
Flow, m³/h	20	25	30	35	36	40	45	50	55	60	65	70	72
Pressure Loss, kg/cm²	0.02	0.05	0.09	0.13	0.14	0.17	0.21	0.24	0.28	0.32	0.38	0.44	0.47
Flow, GPM	88	110	132	154	158.4	176	198	220	242	264	286	308	316.8
Pressure Loss, Psi	0.28	0.71	1.28	1.85	1.99	2.41	2.98	3.41	3.98	4.54	5.40	6.25	6.67

Filtering Element 120 Mesh 150 Mesh

Double Body Disc Filters

3"

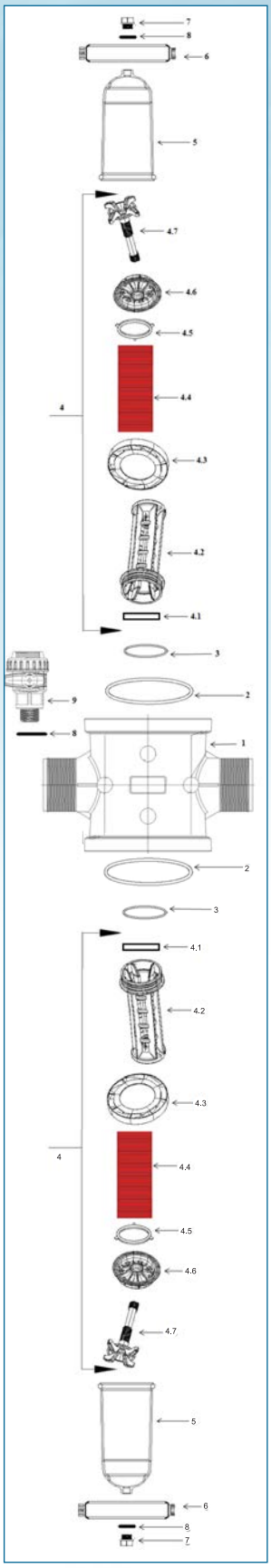

3" Double Disc Filter (Model 136 D - 50 m³/hr)				
AIPL CODE	DESCRIPTION	INLET/OUTLET	CONNECTION SIZE	MICRON /MESH
14340041	3" Double Disc Filter (With SS Clamp) 120 Mesh	Male Threaded NPT	3"	130/120
14100053	3" Double Disc Filter (With SS Clamp) 120 Mesh	Male Threaded BSP	3"	130/120
14420007	3" Double Disc Filter (With SS Clamp) 120 Mesh	Victaulic Connection	3"	130/120

SPARE PARTS				
S. NO	PARTS NAME	PART CODE	MATERIAL	QTY
1	3" Double filter body BSP	12490217	Glass Reinforced Nylon	1
	3" Double filter body NPT	12490216	Glass Reinforced Nylon	
	3" Double filter body VICTAULIC	12490245	Glass Reinforced Nylon	
2	4" Filter Body Gasket	50030033	NBR	2
3	Cartridge O-ring -4.50 mm	50010042	NBR	2
4	Disc Cartridge (120 mesh)	14130001	Glass Reinforced PP	2
	Disc Cartridge (150 mesh)	14130007		2
4.1	Filter cartridge Ring	12490038	Glass Reinforced PP	2
4.2	Disc Housing Body	12490076	Glass Reinforced PP	2
4.3	Disc Housing Fan	12490017	NYLON 6	2
4.4	Filter Disc 120 mesh Red	12490199	PP	400
	Filter Disc 150 Mesh Yellow	12490206	PP	400
4.5	Disc Separator	50100021	PP	2
4.6	Disc housing cap	12490016	Glass Reinforced PP	2
4.7	Disc housing screw	12490018	Glass Reinforced Nylon	2
5	Barrel Small	12490190	Glass Reinforced PP	2
6	SS Clamp - 2.5 mm	50100030	SS-304	2
7	3/4" Filter End Plug	12530100	Glass Reinforced Nylon	2
8	3/4" Vacuum Breaker Rubber Washer	50020050	NBR	3
9	3/4" SU PP BV Threaded End MxF	19100063	PP	1

Double Body Disc Filters

4"

Specifications	AQ-138DS		AQ-138D	
	US Standard	Metric Standard	US Standard	Metric Standard
Inlet/outlet connection	4" NPT male thread	4" BSP male thread	4" NPT male thread	4" BSP male thread
Max. Operating Pressure	110 Psi	8 kg/cm²	110 Psi	8 kg/cm²
Range of Flow Rate	260 - 350 GPM	60 - 80 m³/h	350 - 440 GPM	80 - 100 m³/h
Nominal Flow Rate	310 GPM	70 m³/h	395 GPM	90 m³/h
Filtration Surface area	369 in²	2380 cm²	524 in²	3380 cm²
Material of Construction	Reinforced PP + Nylon		Reinforced PP + Nylon	
Screen Material	Polypropylene disc	Polypropylene Disc	Polypropylene disc	Polypropylene Disc
Cartridge Diameter	4.76 in	121mm	4.76 in	121mm
Cartridge Length	15.75mm X 2	400mm X 2	20.7 in X 2	525mm X 2
Available Mesh	120, 150 mesh	120, 150 mesh	120, 150 mesh	120, 150 mesh

Head Loss : AQ - 138DS

Flow, m³/h	10	20	30	40	45	48	50	55	60	65	70	75	80	85	90	96
Pressure Loss, kg/cm²	0.05	0.07	0.10	0.13	0.15	0.16	0.17	0.19	0.22	0.25	0.29	0.33	0.38	0.42	0.47	0.52
Flow, GPM	44	88	132	176	198	211.2	220	242	264	286	308	330	352	374	396	422.4
Pressure Loss, Psi	0.71	0.99	1.42	1.85	2.13	2.27	2.41	2.70	3.12	3.55	4.12	4.69	5.40	5.96	6.67	7.38

Head Loss : AQ - 138D

Flow, m³/h	10	20	30	40	50	60	64	55	70	75	80	85	90	95	100	105	110	115	120
Pressure Loss, kg/cm²	0.03	0.06	0.09	0.13	0.17	0.22	0.24	0.19	0.27	0.3	0.34	0.38	0.42	0.46	0.5	0.55	0.6	0.65	0.7
Flow, GPM	44	88	132	176	220	264	281.6	242	308	330	350	374	396	418	440	462	484	506	528
Pressure Loss, Psi	0.43	0.85	1.28	1.85	2.41	3.12	3.41	2.70	3.83	4.26	4.82	5.40	5.96	6.53	7.10	7.81	8.52	9.23	9.94

Filtering Element 120 Mesh 150 Mesh

Double Body Disc Filters

4"

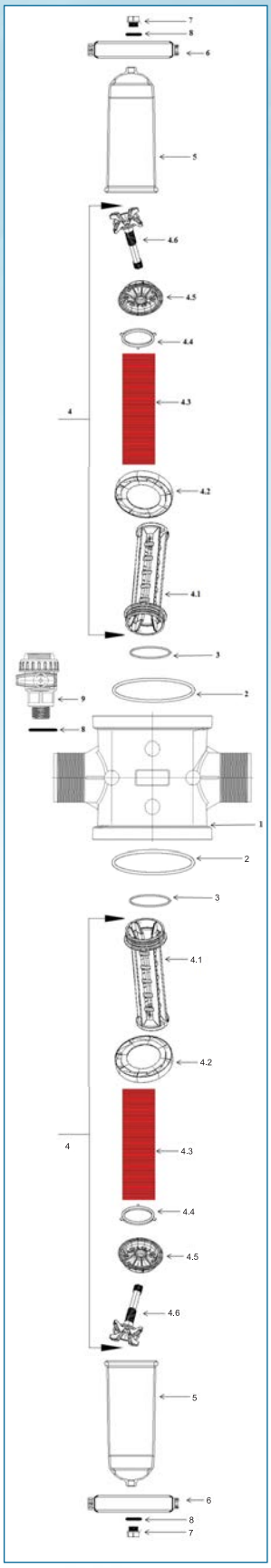

4" Double Disc Filter (Model 138DS - 70 m³hr)				
AIPL CODE	DESCRIPTION	INLET/OUTLET	CONNECTION SIZE	MICRON /MESH
14010078	4" Double Disc Filter (With SS Clamp) 120 Mesh	Male Threaded NPT	4"	130/120
14010072	4" Double Disc Filter (With SS Clamp) 120 Mesh	Male Threaded BSP	4"	130/120
14420008	4" Double Disc Filter (With SS Clamp) 120 Mesh	Victaulic Connection	4"	130/120

SPARE PARTS				
S. NO	PARTS NAME	PART CODE	MATERIAL	QTY
1	4" Double filter body BSP	12490218	Glass Reinforced Nylon	1
	4" Double filter body NPT	12490219	Glass Reinforced Nylon	
	4" Double filter body VICTAULIC	12490246	Glass Reinforced Nylon	
2	4" Filter Body Gasket	50030033	NBR	2
3	Cartridge O-ring -4.50 mm	50010042	NBR	2
4	Filter Cartridge (120 Mesh)	14130005	Glass Reinforced PP	2
	Filter Cartridge (150 Mesh)	14130011		
4.1	Disc Housing Body (136TS)	12490076	Glass Reinforced PP	2
4.2	Disc Housing Fan	12490017	NYLON 6	2
4.3	Filter Disc 120 mesh Red	12490199	PP	560
	Filter Disc 150 Mesh Yellow	12490206	PP	560
4.4	Disc Separator	50100021	PP	2
4.5	Disc housing cap	12490016	Glass Reinforced PP	2
4.6	Disc housing screw	12490018	Glass Reinforced Nylon	2
5	Barrel - Medium	12490116	Glass Reinforced PP	2
6	SS Clamp - 3.0mm	50100645	SS-304	2
7	3/4" Filter End Plug	12530100	Glass Reinforced Nylon	1
8	3/4" Vacuum Breaker Rubber Washer	50020050	NBR	3
9	3/4" SU PP BV Threaded End MxF	19100063	PP	1

4" Double Disc Filter (Model 138D - 90 m³/hr)				
AIPL CODE	DESCRIPTION	INLET/OUTLET	CONNECTION SIZE	MICRON /MESH
14010077	4" Double Disc Filter (With SS Clamp) 120 Mesh	Male Threaded NPT	4"	130/120
14010071	4" Double Disc Filter (With SS Clamp) 120 Mesh	Male Threaded BSP	4"	130/120
14420006	4" Double Disc Filter (With SS Clamp) 120 Mesh	Victaulic Connection	4"	130/120

SPARE PARTS				
S. NO	PARTS NAME	PART CODE	MATERIAL	QTY
1	4" Double filter body BSP	12490218	Glass Reinforced Nylon	1
	4" Double filter body NPT	12490219	Glass Reinforced Nylon	
	4" Double filter body VICTAULIC	12490246	Glass Reinforced Nylon	
2	4" Filter Body Gasket	50030033	NBR	2
3	Cartridge O-ring -4.50 mm	50010042	NBR	2
4	Filter Cartridge (120 Mesh)	14130005	Glass Reinforced PP	2
	Filter Cartridge (150 Mesh)	14130011		
4.1	Disc Housing Body	12490076	Glass Reinforced PP	2
4.2	Disc Housing Fan	12490017	NYLON 6	2
4.3	Filter Disc 120 mesh Red	12490199	PP	790
	Filter Disc 150 Mesh Yellow	12490206	PP	790
4.4	Disc Separator	50100021	PP	4
4.5	Disc housing cap	12490016	Glass Reinforced PP	2
4.6	Disc housing screw	12490018	Glass Reinforced Nylon	2
5	Barrel Long	12490007	Glass Reinforced PP	2
6	SS Clamp - 3.0mm	50100645	SS-304	2
7	3/4" Filter End Plug	12530100	Glass Reinforced Nylon	2
8	3/4" Vacuum Breaker Rubber Washer	50020050	NBR	3
9	3/4" SU PP BV Threaded End MxF	19100063	PP	1

Hydrocyclone Filters

2" & 2½"

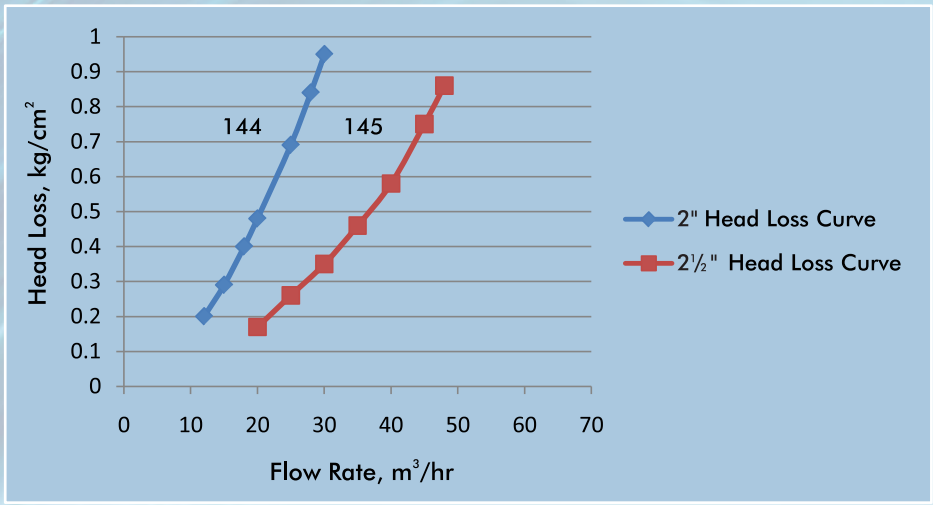

Specifications	AQ-144		AQ-145	
	US Standard	Metric Standard	US Standard	Metric Standard
Inlet / outlet	2″ NPT	2″ BSP	2½″ NPT	2½″ BSP
Maximum Operating Pressure	85 PSI	6 Kg/cm²	85 PSI	6 Kg/cm²
Range of Flow Rate	65-110 GPM	15-25 m³/hr	110-175 GPM	25-40 m³/hr
Nominal Flow Rate	110 GPM	25 m³/hr	130 GPM	30 m³/hr
Material of Construction	Reinforced PP + Nylon		Reinforced PP + Nylon	

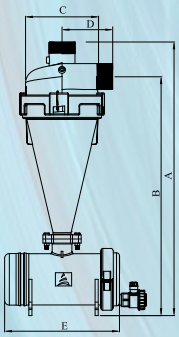

Performance Data

Model No.	Intel / Outlet Inch/mm	Rec. Range of Flow Rate, m³/hr	Nominal Flow Rate m³/hr	Dimensions (mm)					Capacity of Underflow Chamber (ltr)	Gross Weight
				A	B	C	D	E		
144	2" / 50	15-25	25	940	808	206	151	395	8	7.6 kg.
145	2½" / 65	25-40	30	940	815	206	151	395	8	7.8 kg.

Hydrocyclone Filters

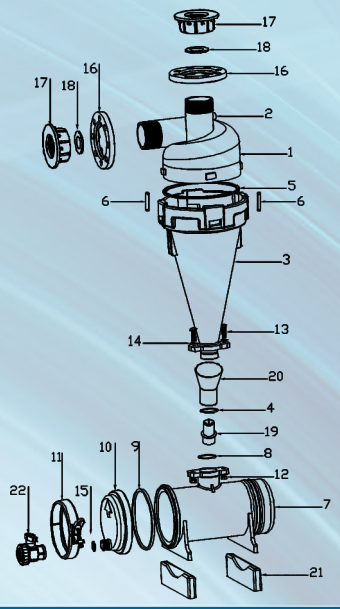

2" Hydrocyclone Filter (Model 144 M- 25 m³/hr)			
AIPL CODE	DESCRIPTION	INLET/OUTLET	CONNECTION SIZE
14110006	2" Hydro Cyclone Filter 2 Nos Slip On Flanges (STD.) NPT, SS Clamp	Thread NPT	2"
14110001	2" Hydro Cyclone Filter 2 Nos Slip On Flanges (STD.) BSP, SS Clamp	Thread BSP	2"
14110013	2" Hydro Cyclone Filter Victaulic, SS Clamp	Victaulic Connection	2"
2½" Hydrocyclone Filter (Model 145 M- 30 m³/hr)			
14110007	2.5" Hydrocyclone filter 2Nos. Silp on Flanges (STD.) NPT, SS Clamp	Threaded NPT	2½"
14110002	2.5" Hydrocyclone filter 2Nos. Silp on Flanges (STD.) BSP, SS Clamp	Threaded BSP	2½"

SPARE PARTS				
S. NO	PARTS NAME	PART CODE	MATERIAL	QTY
1	2" Body (BSP Thread)	12550001	Glass reinforced PA	1
	2" Body (NPT Thread)	12550024		
	2½" Body (BSP Thread)	12550003		
	2½" Body (NPT Thread)	12550031		
2	Brass Bush	50100033	Brass	2
3	Cone	12550002	Glass reinforced PP	1
4	Cone O-Ring Small	50010088	NBR	1
5	Cone Main O-Ring	50030009	NBR	1
6	SS Lock Pin	50100035	SS-304	2
7	Collector Tank (8 Ltr.)	12550007	Glass reinforced PP	1
8	Collector Tank O-Ring (2" End Cap O-ring)	50010043	NBR	1
9	Collector Tank Gasket	50030006	NBR	1
10	Collector Tank Cap	12550008	Glass reinforced PP	1
11	SS Clamp	14010060	SS-304	1
12	Nut (10 MM)	50060013	SS-304	2
13	Bolt (10 X 50)	50060002	SS-304	2
14	Washer (10 MM)	50020006	SS-304	4
15	1" Ball Valve Rubber Washer (2" VI Rotameter Washer)	50020010	NBR	1
16	Slip On Flange	12550016	Glass reinforced PP	2
17	Slip On Socket (BSP Thread)	12550039	Glass reinforced PP	2
	Slip On Socket (NPT Thread)	12550052		
18	Slip On Flange Rubber Washer	50010063	NBR	2
19	Damper	12550035	POM	1
20	Cone Sleeve	12550033	TPU	1
21	Tank Stand Small	12270030	Glass reinforced PP	1
22	1" FXF Ball Valve	19070006	PVC	1

Hydrocyclone Filters

3"

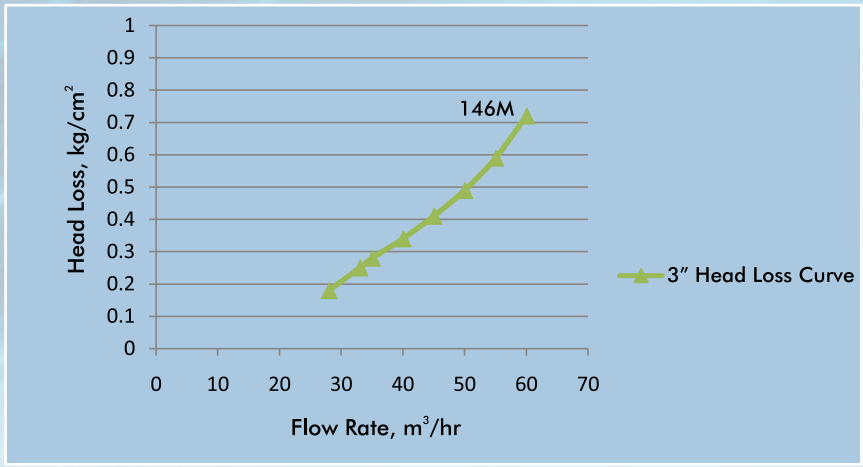

Specifications	AQ-146	
	US Standard	Metric Standard
Inlet / outlet	3″ NPT	3″ BSP
Maximum Operating Pressure	110 PSI	6 Kg/cm²
Range of Flow Rate	155-230 GPM	35-52 m³/hr
Nominal Flow Rate	220 GPM	50 m³/hr
Body Material	Reinforced PP + Nylon	

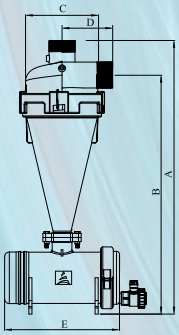

Performance Data

Model No.	Intel / Outlet Inch/mm	Rec. Range of Flow Rate, m³/hr	Nominal Flow Rate m³/hr	Dimensions (mm)					Capacity of Underflow Chamber (ltr)	Gross Weight
				A	B	C	D	E		
146	3" / 80	35-52	50	990	868	248	175	395	8	9.4 kg.
			50	990	868	248	175	482	10	9.6 kg.

Hydrocyclone Filters

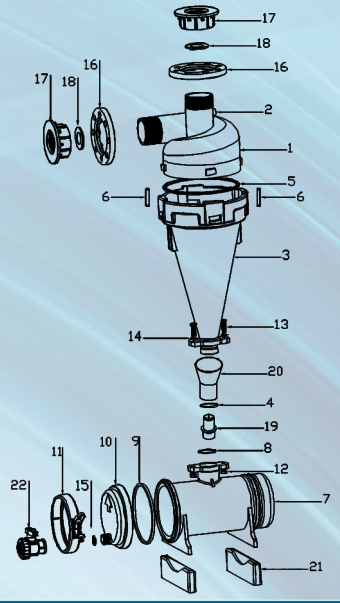

3" Hydrocyclone Filter (Model 146 M - 50 m³/hr)				
AIPL CODE	DESCRIPTION	INLET/OUTLET	CONNECTION SIZE	
14110008	3" Hydro Cyclone Filter 2 Nos Slip On Flanges (STD.) NPT, SS Clamp	THREAD NPT	3"	
14110003	3" Hydro Cyclone Filter 2 Nos Slip On Flanges (STD.) BSP, SS Clamp	THREAD BSP	3"	
14110012	3" Hydro Cyclone Filter Victaulic, SS Clamp	Victaulic Connection	3"	
SPARE PARTS				
S. NO	PARTS NAME	PART CODE	MATERIAL	QTY
1	Body (BSP Thread)	12550004	Glass reinforced PA	1
	Body (NPT Thread)	12550005		
2	Brass Bush	50100033	Brass	2
3	Cone	12550006	Glass reinforced PP	1
4	Cone O-Ring Small	50010088	NBR	1
5	Cone Main O-Ring	50030009	NBR	1
6	SS Lock Pin	50100035	SS-304	2
7	Collector Tank (8 Ltr)	12550007	Glass reinforced PP	1
	Collector Tank (10 Ltr)	12270025	Glass reinforced PA	
8	Collector Tank O-Ring (2" End Cap O-ring)	50010043	NBR	1
9	Collector Tank Gasket	50030006	NBR	1
10	Collector Tank Cap	12550008	Glass reinforced PP	1
11	SS Clamp	14010060	SS-304	1
12	Nut (10 MM)	50060013	SS-304	2
13	Bolt (10 x 50)	50060002	SS-304	2
14	Washer (10 MM)	50060006	SS-304	4
15	1" Ball Valve Rubber Washer (2" VI Rotameter Washer)	50020010	NBR	1
16	Slip On Flange	12550013	Glass reinforced PP	2
17	Slip On Socket (BSP Thread)	12550046	Glass reinforced PP	2
	Slip On Socket (NPT Thread)	12550049		
18	Slip On Flange Rubber Washer	50020043	NBR	2
19	Damper	12550037	POM	1
20	Cone Sleeve	12270027	TPU	1
21	Tank Stand Big	12270026	Glass reinforced PP	2
	Tank Stand Small	12270030		
22	1" FXF Ball Valve	19070006	PVC	1

Venturi Injector

AQ-112RS & AQ-113RS

Performance Data

Pressure		¾" Venturi Injector (Model 112)		1" Venturi Injector (Model 113)	
P. in	P. out	Q inj	Q asp	Motive Flow	Water Suction
Inlet Pressure kg/cm²	Outlet Pressure kg/cm²	Motive Flow L/H	Water Suction L/H	L/H L/H	L/H L/H
0.5	0	750	200	2200	300
0.75	0	856	200	2640	300
1	0	983	200	3000	300
	0.25		150		300
	0.5		150		200
1.5	0	1195	200	3500	300
	0.5		200		300
	0.75		180		180
	1		50		80
2	0	1356	200	4290	300
	0.5		200		300
	0.75		180		260
	1		170		219
	1.25		120		162
	1.5		40		29
2.5	0	1527	200	4645	300
	0.5		200		300
	0.75		200		300
	1		200		292
	1.25		160		240
	1.5		150		152
	1.75		80		78
3	0	1671	200	5065	300
	1		200		300
	1.25		200		240
	1.5		200		256
	1.75		175		210
	2		150		150
	2.25		60		60
3.5	0	1783	200	5370	300
	1		200		300
	1.5		200		250
	1.75		200		240
	2		190		216
	2.25		150		120
	2.5		100		81
	2.75		40		20
4	0	1907	200	5720	300
	1		200		300
	2		200		290
	2.25		170		200
	2.5		160		179
	2.75		120		118
	3		50		56

*The test carried out by using water as suction liquid.

Typical Installation

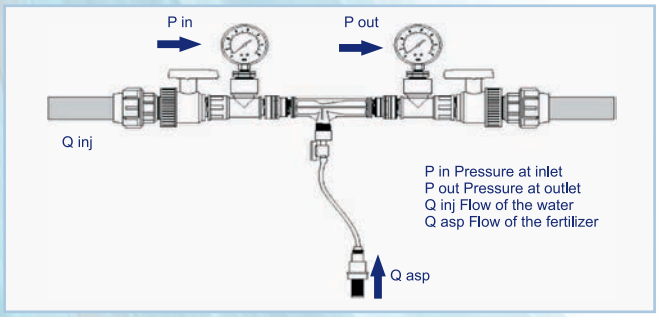

Venturi Injector

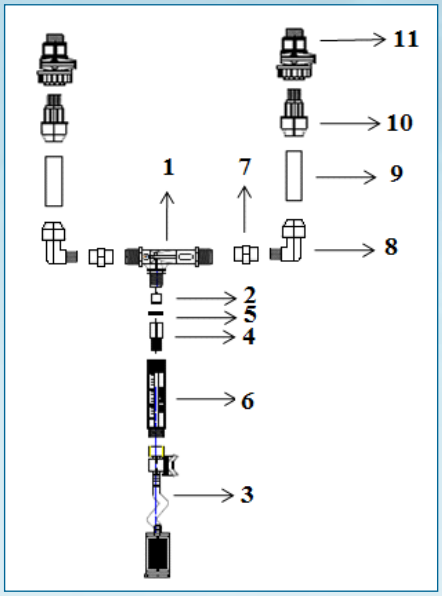

AQ-112RS			
ITEM CODE	MODEL NO	DESCRIPTION	CONNECTION SIZE
20030001	112	3/4" Venturi With Suction Port	3/4" BSP (25mm)
20030006	112	3/4" Venturi With Suction Port	3/4" NPT(25mm)
20010001	112R	3/4" Venturi With Suction Port & Rotameter	3/4" BSP (25mm)
20010006	112R	3/4" Venturi With Suction Port & Rotameter	3/4" NPT(25mm)
20060025	112S	3/4" Venturi Assy With Suction Port	3/4" BSP (25mm)
20060026	112S	3/4" Venturi Assy With Suction Port	3/4" NPT(25mm)
20050027	112RS	3/4" Venturi Assy With Suction Port & Rotameter	3/4" BSP (25mm)
20050028	112RS	3/4" Venturi Assy With Suction Port & Rotameter	3/4" NPT(25mm)

SPARE PARTS				
S. NO	PARTS NAME	PART CODE	MATERIAL	QTY
1	Body (BSP Thread) Black	12440002	Glass reinforced PP	1
	Body (NPT Thread) Black	12440002		
2	NRV	20000006	PP	1
3	Suction Port Assy	20000001	Glass reinforced PP	1
4	Adoptor	12460020	Glass reinforced PP	1
5	Adoptor Washer	50020009	NBR	1
6	Rotameter Assy	20000009	PP	1
7	3/4" Hex Socket	12440001	Glass reinforced PP	1
8	25mm MTAEbody (C.F.)	12480016	PP	2
9	25mm MTA body (C.F.)	12480016	PP	2
10	HDPE PIPE 25X3/4"	50100151	HDPE	1ft x2
11	3/4" FXF PVC Ball Valve	19070002	PVC	2
	3/4" MXF PVC Ball Valve	19070001		

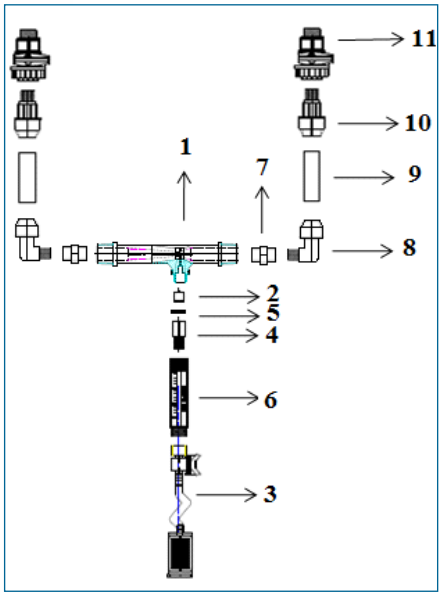

AQ-113RS			
ITEM CODE	MODEL NO	DESCRIPTION	CONNECTION SIZE
20030002	113	1" Venturi With Suction Port	1" BSP (32mm)
20030007	113	1" Venturi With Suction Port	1" NPT(32mm)
20010002	113R	1" Venturi With Suction Port & Rotameter	1" BSP (32mm)
20010007	113R	1" Venturi With Suction Port & Rotameter	1" NPT(32mm)
20060023	113S	1" Venturi Assy With Suction Port	1" BSP (32mm)
20060024	113S	1" Venturi Assy With Suction Port	1" NPT(32mm)
20050025	113RS	1" Ventury Assy With Suction Port & Rotameter	1" BSP (32mm)
20050026	113RS	1" Ventury Assy With Suction Port & Rotameter	1" NPT(32mm)

SPARE PARTS				
S. NO	PARTS NAME	PART CODE	MATERIAL	QTY
1	Body (BSP thread) Black	12420001	Reinforced PP	1
	Body (NPT thread) Black	12420011		
2	NRV	20000006	PP	1
3	Suction Port Assy	20000001	Glass reinforced PP	1
4	Adopter	12460018	Glass reinforced PP	1
5	Adopter washer	50020009	NBR	1
6	Rotameter Assy	20000011	PP	1
7	1" Hex Socket	12440001	Reinforced PP	2
8	32mm MTAEbody (C.F.)	12420002	PP	2
9	32mm MTA body (C.F.)	12470007	PP	2
10	HDPE PIPE 32X27mm	50100232	HDPE	2
11	1"FxF PVC ball valve	19070006	PVC	2
	1"MxF PVC ball valve	19070005		

Venturi Injector

AQ-114RS

Typical Installation

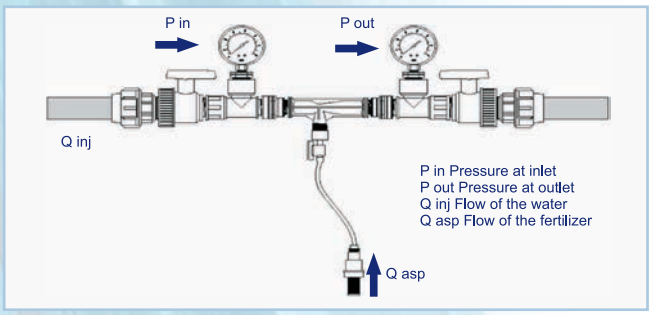

*The test carried out by using water as suction liquid.

Performance Data

Pressure		1½" Venturi Injector (Model 114)	
P. in	P. out	Q inj	Q asp
Inlet Pressure kg/cm²	Outlet Pressure kg/cm²	Motive Flow L/H	Water Suction L/H
0.5	0	3238	698
0.75	0	3902	798
1	0	4532	808
	0.25		780
	0.5		506
1.5	0	5712	811
	0.5		802
	0.75		631
	1		317
2	0	6590	814
	0.5		808
	0.75		808
	1		719
	1.25		518
	1.5		215
2.5	0	7428	814
	0.5		808
	0.75		808
	1		806
	1.25		768
	1.5		594
	1.75		371
	2		112
3	0	8163	812
	1		807
	1.25		807
	1.5		795
	1.75		712
	2		502
	2.25		284
3.5	0	8814	822
	1		820
	1.5		811
	1.75		808
	2		761
	2.25		575
	2.5		356
	2.75		186
4	0	9422	821
	1		808
	2		804
	2.25		793
	2.5		678
	2.75		492
	3		268
	3.25		112
4.5	0	9918	826
	1		814
	2		811
	2.5		794
	2.75		725
	3		558
	3.25		406
	3.5		216
	3.75		66
5	0	10471	827
	1		814
	2		814
	3		796
	3.25		686
	3.5		505
	3.75		358
	4		168

Venturi Injector

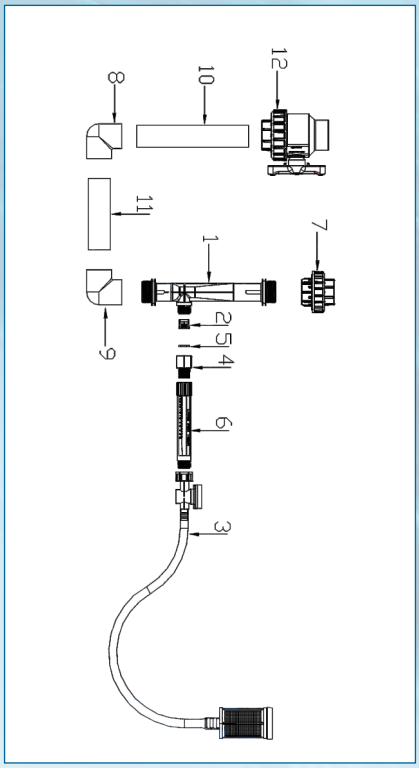

AQ-114RS			
ITEM CODE	MODEL NO	DESCRIPTION	CONNECTION SIZE
20030003	114	1½" Venturi With Suction Port	1½" BSP (50 mm)
20030008	114	1½" Venturi With Suction Port	1½" NPT(50 mm)
20010003	114R	1½" Venturi With Suction Port & Rotameter	1½" BSP (50 mm)
20010008	114R	1½" Venturi With Suction Port & Rotameter	1½" NPT(50 mm)
20060003	114S	1½" Venturi Assy With Suction Port	1½" BSP (50 mm)
20060008	114S	1½" Venturi Assy With Suction Port	1½" NPT(50 mm)
20050003	114RS	1½" Venturi Assy With Suction Port & Rotameter	1½" BSP (50 mm)
20050008	114RS	1½" Venturi Assy With Suction Port & Rotameter	1½" NPT(50 mm)

SPARE PARTS

S. NO	PARTS NAME	PART CODE	MATERIAL	QTY
1	Body (BSP Thread) Black	12430002	Glass reinforced PP	1
	Body (NPT Thread) Black	12430003		
2	NRV	20000014	Glass reinforced PP	1
3	Suction Port Assy	20000003	Glass reinforced PP	1
4	Adoptor	12430008	PP	1
5	Adoptor Washer	50020011	NBR	1
6	Rotameter Assy	20000012	Glass reinforced PP	1
7	Union 50 MM(TXT)	12000002	PVC	1
8	Elbow 50MM (PXP)	12230048	PVC	1
9	Elbow 50MM (TXP)	12430007	PVC	1
10	Pipe 50MM (LENGTH -600 mm)	50100007	PVC	1
11	Pipe 50MM (275 mm)	50100007	PVC	1
12	50 mm SU Ball Valve (PXT)	19070508	PVC	1

Venturi Injector
AQ - 115RS

Performance Data

Pressure		2" venturi Injector Low Flow (Model 115LF)		2" venturi Injector High Flow (Model 115HF)	
P. in	P. out	Q inj	Q asp	Q inj	Q asp
Kg/cm2	Kg/cm2	Motive Flow L/H	Water Suction L/H	Motive Flow L/H	Water Suction L/H
0.5	0	3141	800	10320	2000
0.75	0	3924	835	12300	2000
1	0	4697	850	14400	2000
	0.25		700		1900
	0.5		400		1800
1.5	0	5741	900	16800	2000
	0.5		700		1980
	0.75		400		1500
	1		150		1900
2	0	6598	900	18900	2000
	0.5		810		2000
	0.75		710		1800
	1		500		1500
	1.25		271		1020
	1.5		200		600
2.5	0	7346	900	20100	2000
	0.5		900		2000
	0.75		890		1980
	1		800		1580
	1.25		750		1500
	1.5		400		1080
	1.75		250		720
	2		200		N/S
3	0	8041	900	22500	2000
	1		900		2000
	1.25		850		2000
	1.5		750		1620
	1.75		450		1500
	2		250		840
	2.25		200		520
	2.5		150		N/S
3.5	0	8688	900	24300	2000
	1		900		2000
	1.5		850		2000
	1.75		750		1800
	2		450		1580
	2.25		300		1490
	2.5		250		860
	2.75		200		N/S
4	0	9290	900	25800	2000
	1		900		2000
	2		800		1500
	2.25		700		1400
	2.5		400		1020
	2.75		200		840
	3		150		580
	3.25		100		N/S
4.5	0	9841	900	26400	2000
	1		900		2000
	2		880		2000
	2.5		800		1700
	2.75		500		1500
	3		300		500
	3.25		250		350
	3.5		200		N/S
	3.75		150		N/S
5	0	10397	900	28500	2000
	1		900		2000
	2		850		2000
	3		700		1900
	3.25		500		1400
	3.5		310		700
	3.75		250		400
	4		200		N/S
	4.25		150		N/S
5.5	0	10866	900	30000	2000
	1		900		2000
	2		900		2000
	3		850		1800
	3.25		700		1800
	3.5		550		1000
	3.75		450		900
	4		320		800
	4.25		270		200
	4.5		200		N/S
	4.75		150		N/S
6	0	11171	900	32000	2000
	1		900		2000
	2		900		2000
	3		850		1900
	4		700		1800
	4.25		600		700
	4.5		510		500
	4.75		400		N/S
	5		250		N/S

Typical Installation

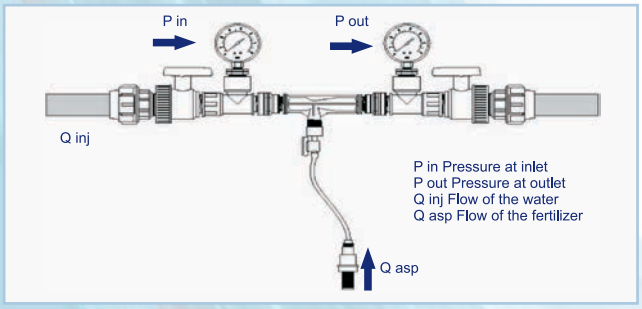

*The test carried out by using water as suction liquid.

Venturi Injector

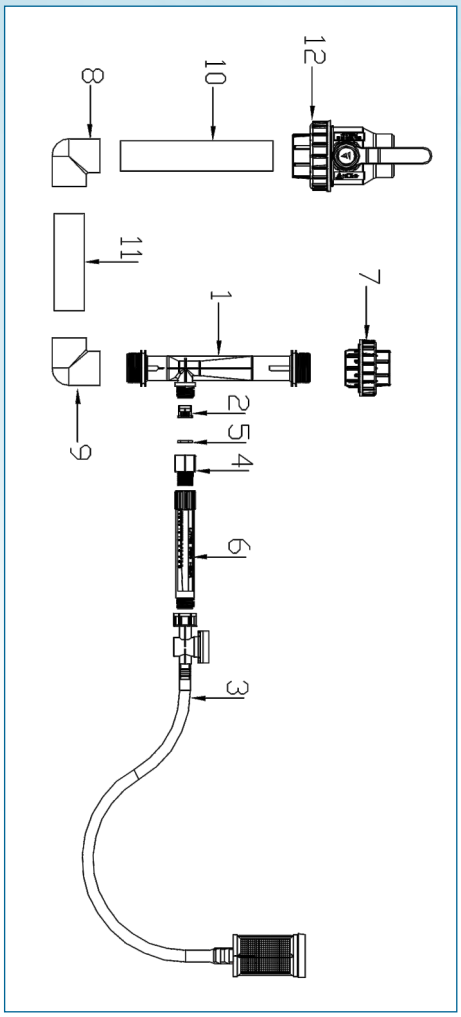

AQ-115RS			
ITEM CODE	MODEL NO	DESCRIPTION	CONNECTION SIZE
20030004	115	2" Venturi With Suction Port (L.F)	2" BSP (63 mm)
20030005	115	2" Venturi With Suction Port (H.F)	2" BSP (63 mm)
20030009	115	2" Venturi With Suction Port (L.F)	2" NPT(63 mm)
20030010	115	2" Venturi With Suction Port(H.F)	2" NPT(63 mm)
20010004	115R	2" Venturi With Suction Port & Rotameter(L.F)	2" BSP (63 mm)
20010005	115R	2" Venturi With Suction Port & Rotameter(H.F)	2" BSP (63 mm)
20010009	115R	2" Venturi With Suction Port & Rotameter(L.F)	2" NPT(63 mm)
20010010	115R	2" Venturi With Suction Port & Rotameter(H.F)	2" NPT(63 mm)
20060004	115S	2" Venturi Assy with Suction Port (L. F.)	2" BSP (63 mm)
20060019	115S	2" Venturi Assy with Suction Port (L. F.)	2" BSP (63 mm)
20060009	115S	2" Venturi Assy with Suction Port (L. F.)	2" NPT(63 mm)
20060010	115S	2" Venturi Assy with Suction Port (L. F.)	2" NPT(63 mm)
20050004	115RS	2" Venturi Assy With Suction Port & Rotameter(L.F)	2" BSP (63 mm)
20050005	115RS	2" Venturi Assy With Suction Port & Rotameter(H.F)	2" BSP (63 mm)
20050009	115RS	2" Venturi Assy With Suction Port & Rotameter(L.F)	2" NPT(63 mm)
20050010	115RS	2" Venturi Assy With Suction Port & Rotameter(H.F)	2" NPT(63 mm)

SPARE PARTS

S. NO	PARTS NAME	PART CODE	MATERIAL	QTY
1	VI Body LF (BSP) Black	12450003	Glass reinforced PP	1
	VI Body LF(NPT) Black	12450004		
	VI Body HF (BSP) Black	12450001		
	VI Body HF(NPT) Black	12450002		
2	NRV	20000005	Glass reinforced PP	1
3	Suction Port Assy	20000004	Glass reinforced PP	1
4	Adoptor	12450016	PP	1
5	Adoptor Washer	50020010	NBR	1
6	Rotameter Assy	20000008	Glass reinforced PP	1
7	Union 63MM (TXT)	19070531	PVC	1
8	Elbow (PXP)63MM	12240030	PVC	1
9	Elbow 63MM(PXT)	12240029	PVC	1
10	Pipe 63MM (LENGTH-580 mm)	50100002	PVC	1
11	Pipe 63MM (LENGTH-310 mm)	50100002	PVC	1
12	2" Long Blue Handle Ball Valve (PXT) S.U	19070528	PVC	1

Fertilizer Tank

AQ-117

Technical Specification

- Available tank capacity: 30 litre
- Inlet, outlet and Drain Ports Connection: ¾" BSP/NPT Female threaded
- Max. working Pressure: 6 kg/cm²
- Material of Construction: HDPE

Operation

The fertilizer tanks are simple to use and easy to portable. A pressure differential between the inlet and outlet connections, creates flow into the tank through inlet port, displacing chemical from the tank through the outlet and into the mains.

Performance Chart

Pressure Differential between inlet/outlet, kg/cm²	Min. Operation Time, min.
0.2	12.5
0.3	9.5
0.5	7.5

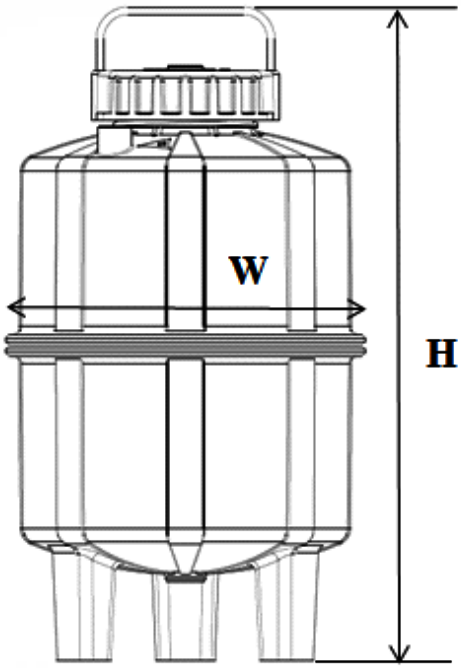

Dimensions & Weight

Height, H	685 mm
Width, W	382 mm
Weight	6.15 kg

Fertilizer Tank

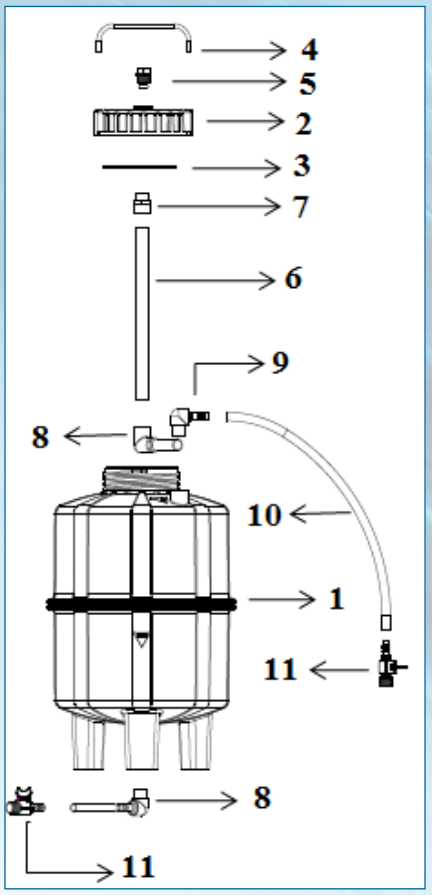

Fertilizer Tank (Model 117 - 30 Litre)				
AIPL CODE	DESCRIPTION	INLET/OUTLET	CONNECTION SIZE	MICRON /MESH
21000001	Fertilizer Tank - 30 Litre	Female Threaded	3/4"	
SPARE PARTS				
S. NO	PARTS NAME	PART CODE	MATERIAL	QTY
1	Fertilizer Tank	21000002	HDPE	1
2	Tank Cover	12690003	Glass Reinforced PP	1
3	Tank Cover Gasket	50030036	NBR	1
4	Tank Handle	50100820	MS Plated	1
5	3/4" Vacuum Breaker	25100051	Glass Reinforced PP	1
6	20mm OD - PVC pipe	50100821	PVC	14inch
7	20mmx3/4" male threaded Socket	50100822	PVC	1
8	20mm Elbow	50100823	PVC	2
9	3/4" x 16mm Elbow	50100824	PP	2
10	16mm lateral pipe	50100825	LDPE/Transparent hose braided pipe	1m x 2
11	3/4" x 16mm lateral valve	19030014	Glass Reinforced PP	3

Warranty & Disclaimer

Automat products are warranted for one year from date of original sale to be free of defective materials and workmanship when used within the working specifications for which the product was designed and under normal use and service. The manufacturer assumes no responsibility for installation, removal or unauthorized repair. The manufacturer's liability under this warranty is limited solely to replacement or repair of defective parts, and the manufacturer will not be liable for any crop or other consequential damages resulting from any defects in design or breach of warranty.

AUTOMAT

18-19, Dilshad Garden, G T Road, New Delhi-110095. (INDIA) Tel. : +91-11-43099800-01-02, 22583027, Fax : +91-11-22121035, 43099807
Website : www.automatworld.com : E-mail : contactus@automatworld.com
https://www.facebook.com/automatindustries YouTube https://www.youtube.com/automatindustries https://twitter.com/automat2014